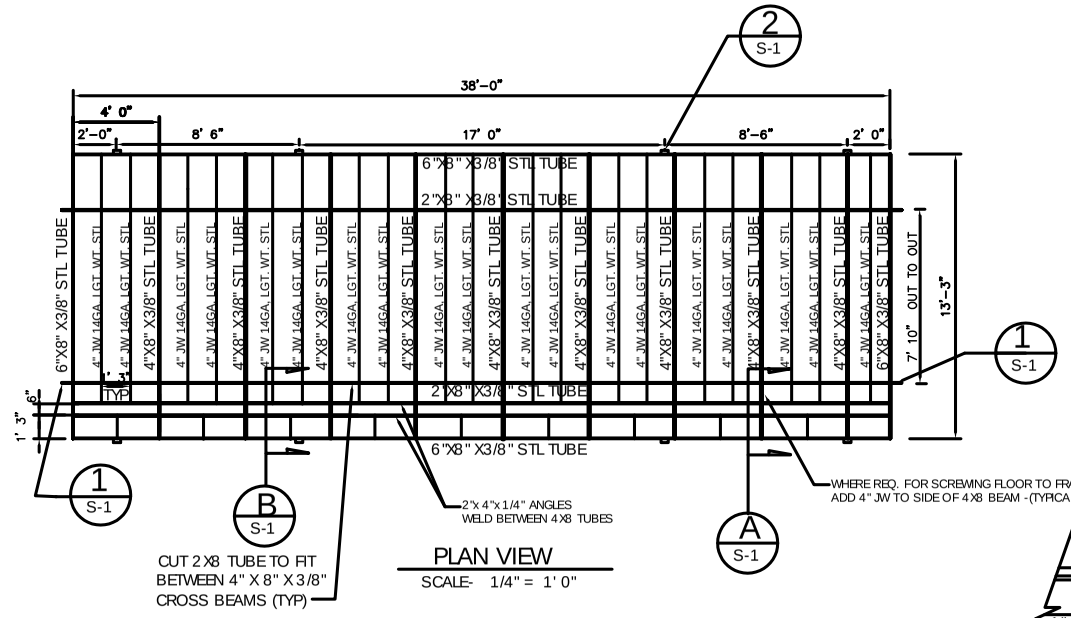

PLAN VIEW
SCALE- 1/4" = 1' 0"

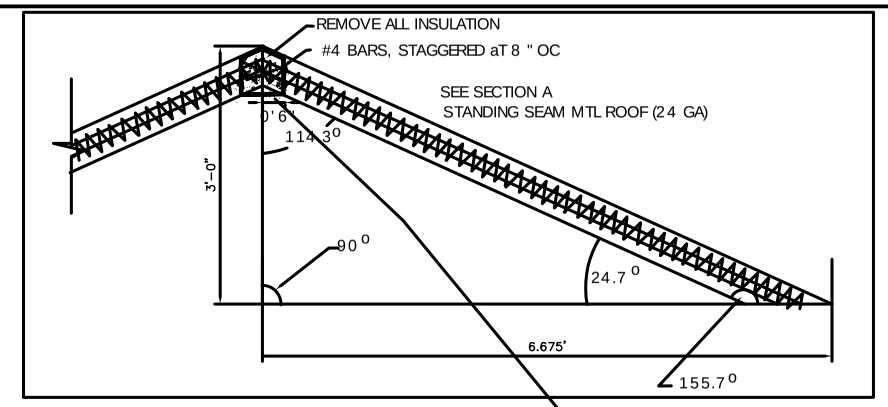

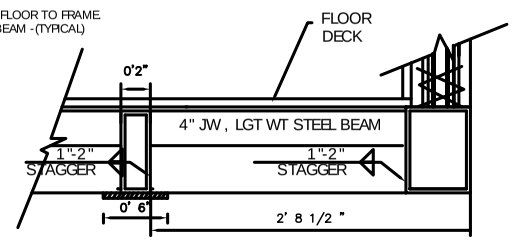

SECTION B
SCALE - NONE

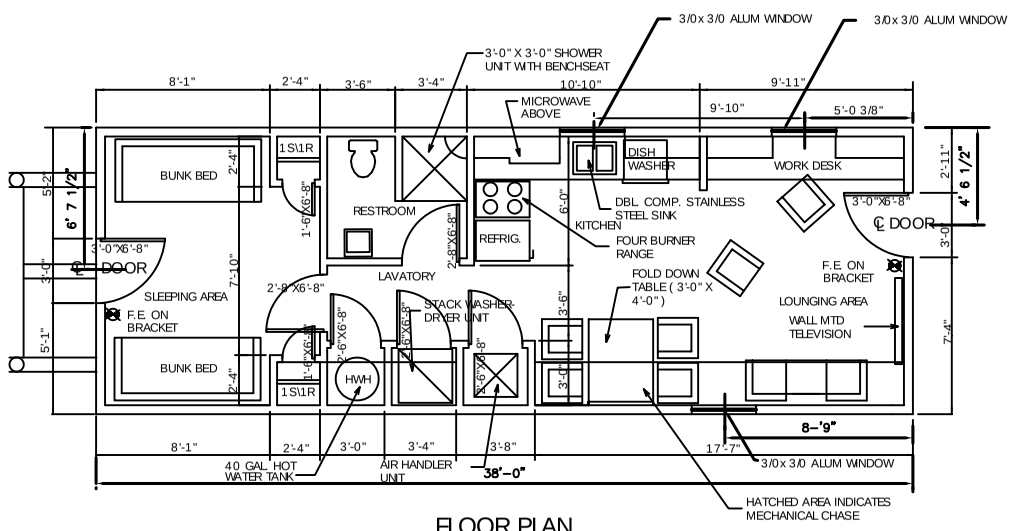

FLOOR PLAN
SCALE 1/4" = 1'-0"

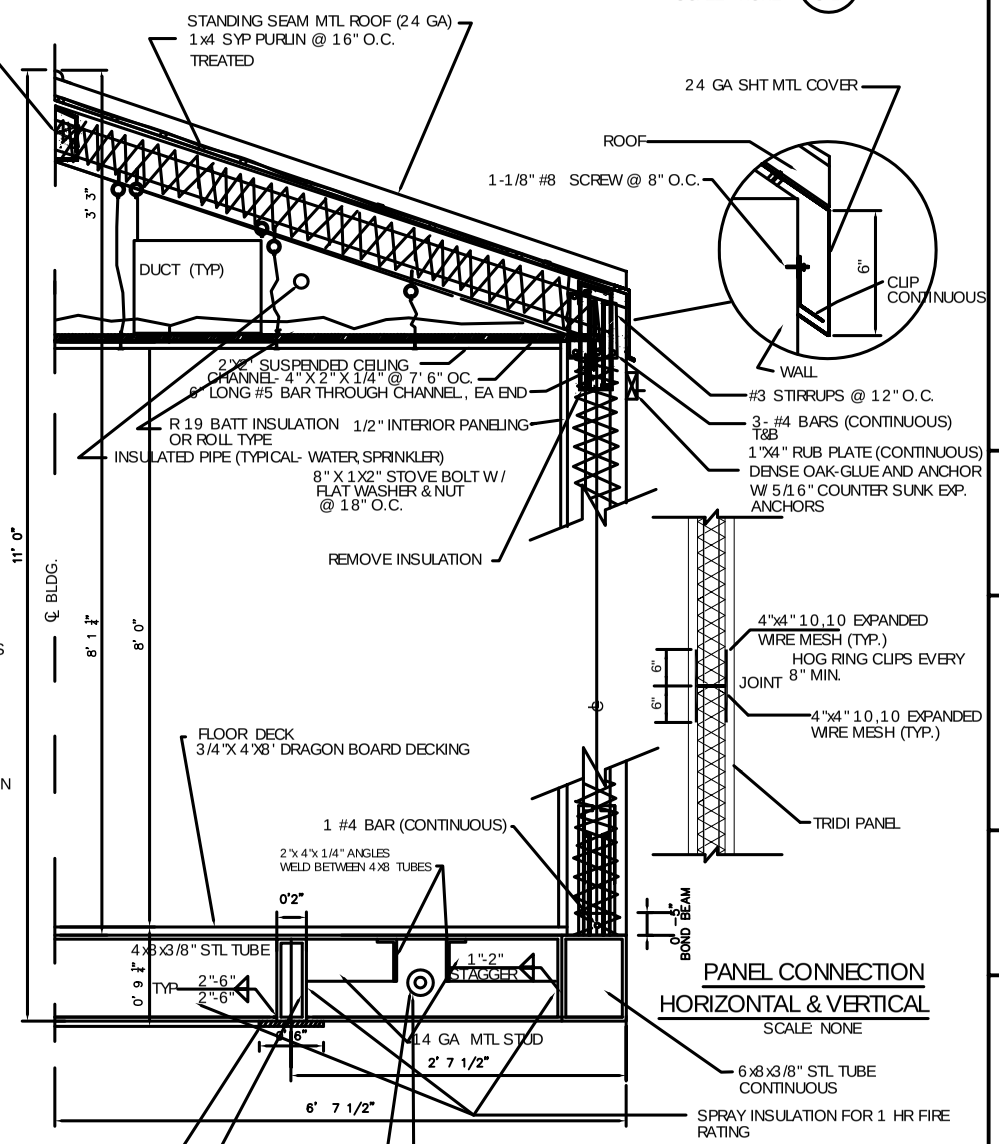

SECTION A
SCALE - NONE

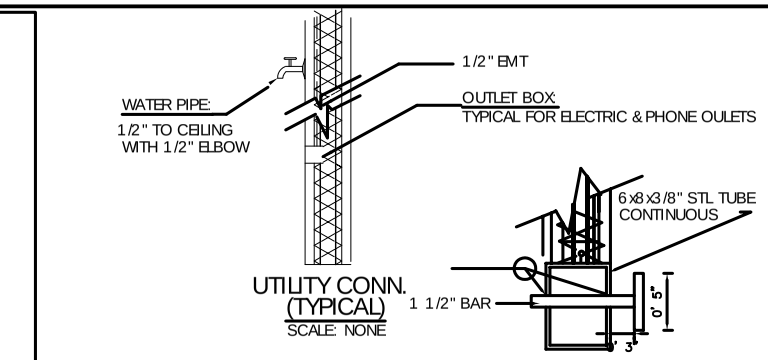

DETAIL 2 S-1
SCALE - NONE

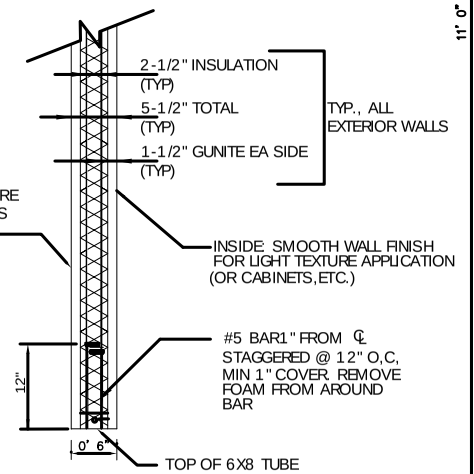

TYPICAL WALL
SCALE NONE

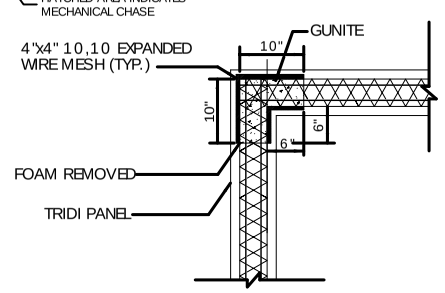

CORNER CONNECTION
(TYPICAL)
SCALE NONE

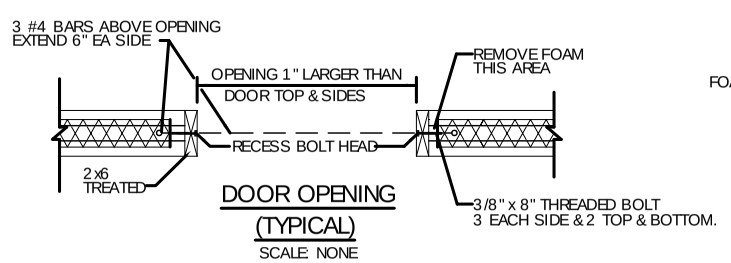

DOOR OPENING
(TYPICAL)
SCALE NONE

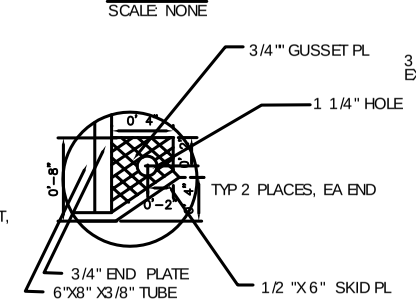

DETAIL 1 S-1
SCALE = NONE

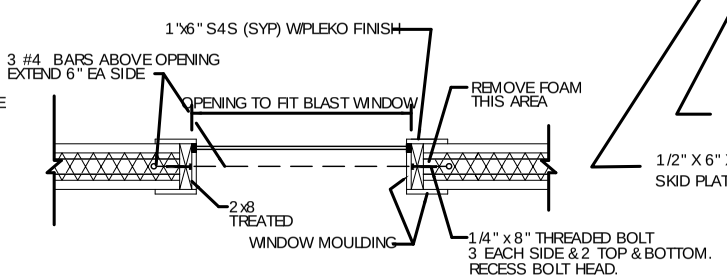

WINDOW OPENING
(TYPICAL)
SCALE NONE

RATINGS

IBC BASIC WIND SPEED -(3 SECOND GUST)
WIND -140 MPH (WHEN ANCHORED PER HUD REQUIREMENTS)

SNOW - 100 PSF

INSULATION

EXTERIOR WALLS	R= 42
ROOF / CEILING	R= 42
FLOOR	R= 10

COMPONANT RATINGS

EXTERIOR WALLS	1.5 HR
ROOF-	1.5 HR
FLOOR-	1.5HR
DOORS -	1.5HR
WINDOWS	BLAST RESISTANT

NOTES:

1. WHERE FOAM IS REMOVED FROM ANY SECTION OF PANEL, USE EXPANDED METAL LATH FOR BACK UP WHEN SHOOTING GUNITE.
2. LAP STEEL BARS MINIMUM OF 16" AT SPLICES.
3. SHOTCRETE SHALL BE MINIMUM 4000 PSI.
4. REBAR SHALL BE f y 60000 PSI
5. WELD CAP ON OPEN ENDS OF ALL OPEN STEEL TUBES
6. ALL FRAME WELDING SHALL BE CONTINUOUS, WITH 1/4" FILLET, UNLESS SHOWN OTHERWISE.

REVISED 1/05/2009

DAMMON ENGINEERING, INC.

CHIEF ENGINEER
EMMETT DAMMON, P.E.

CHIEF ARCHITECT
ROBERT WILTSE

1095 FLORIDA AVENUE
SLIDELL, LA. 70458
OFFICE: 985-649-5832
FAX: 985-641-5950

WEBSITE:
WWW.DAMMONENGINEERING.COM

EMAIL:
DAMMONENG@BELLSOUTH.NET

ARCHITECTURE
ENGINEERING
STUDIES
PLANNING
INVESTIGATION
EXPERT WITNESS

OFFICE / QUARTERS BUILDING

JERRY GIBBENS
LAFAYETTE, LA

STRUCTURAL PLAN

REV:

SCALE: AS NOTED

JOB#:

DATE: 04-17-08

SHEET

S-1

OF