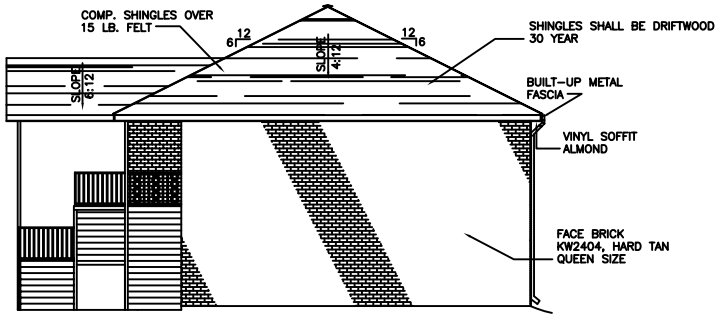

EAST SIDE ELEVATION
SCALE:3/16"=1'-0"

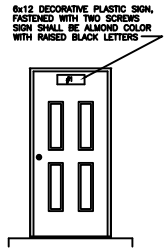

SIGN ON DOOR
N.T.S.

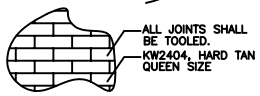

EXPOSED BRICK DETAIL
N.T.S.

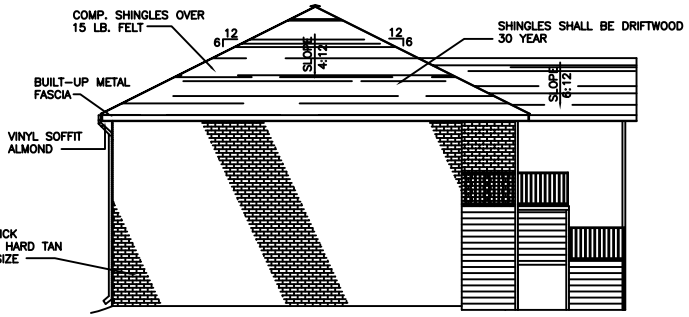

WEST SIDE ELEVATION
SCALE:3/16"=1'-0"

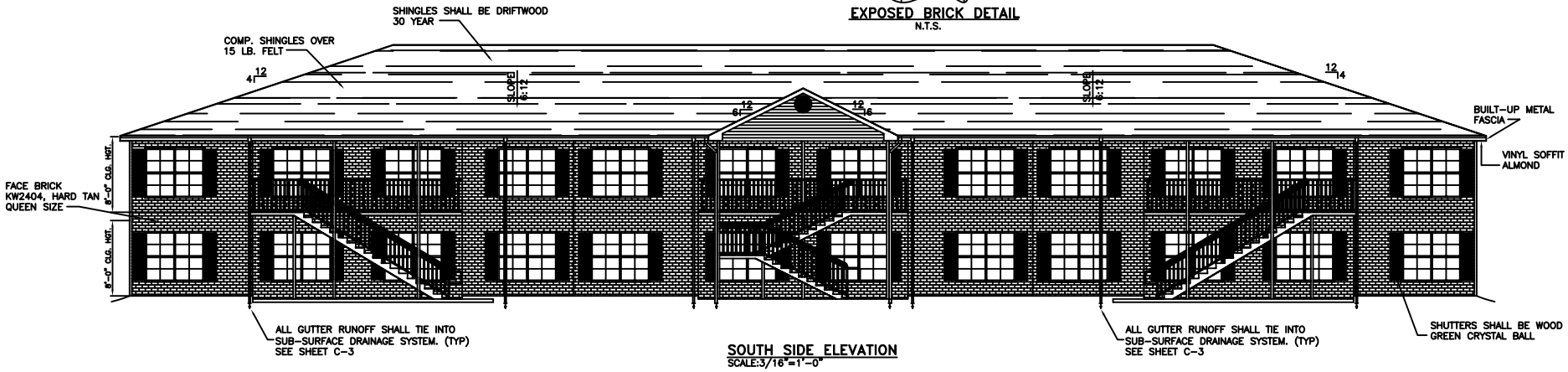

SOUTH SIDE ELEVATION
SCALE:3/16"=1'-0"

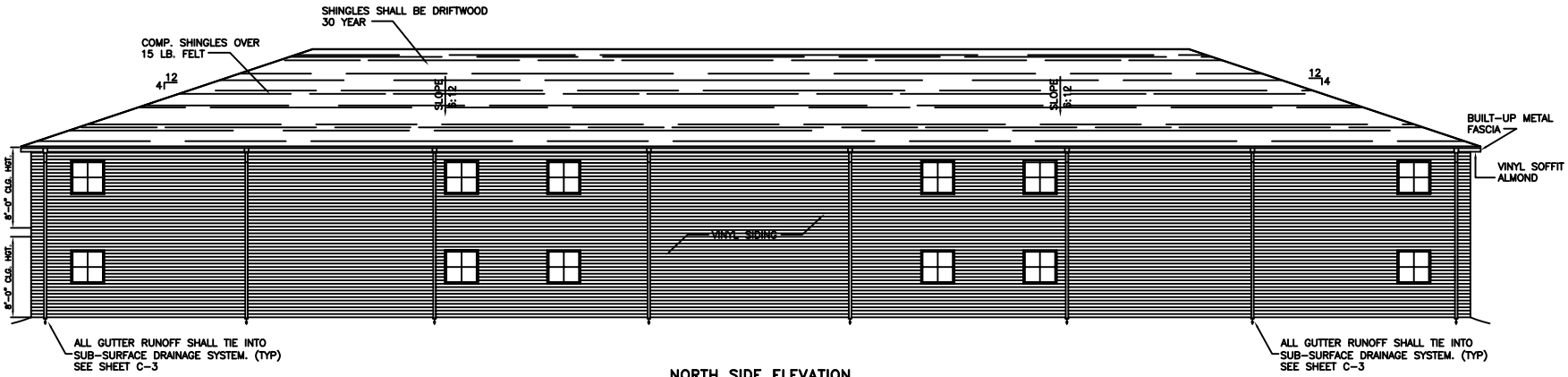

NORTH SIDE ELEVATION
SCALE:3/16"=1'-0"

EXTERIOR ELEVATIONS

BRIAN RIENE
JOSEPH STREET
SLIDELL, LOUISIANA

SUN VALLEY APARTMENTS PHASE 2

DAMMON ENGINEERING, INC.
1085 FLORIDA AVENUE 985-649-5832 SLIDELL, LA. 70458
DAMMONENGINEERING.COM

SCALE:AS NOTED
FILE:
JOB NO.1697
DATE:01-06-06
SHEET 12
A-3
OF 27