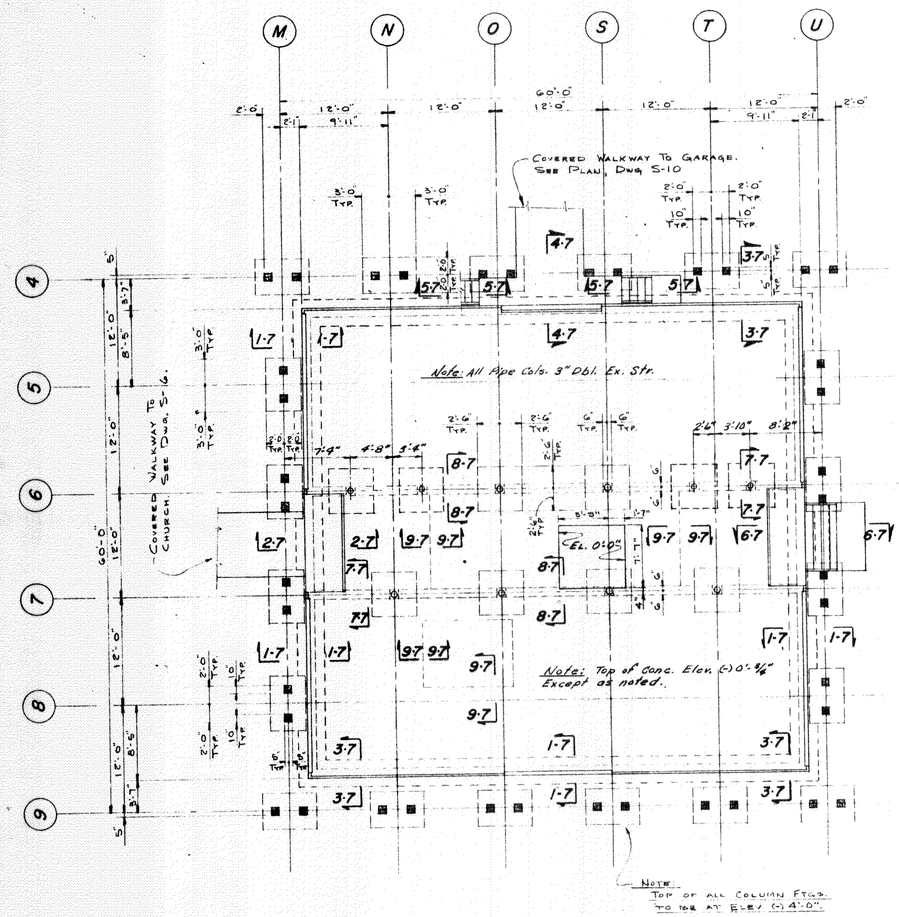

FOUNDATION AND FIRST FLOOR PLAN

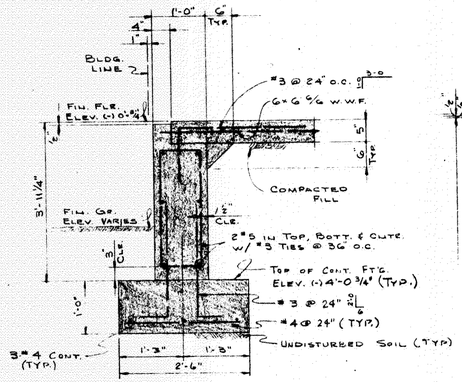

SECTION 1-1

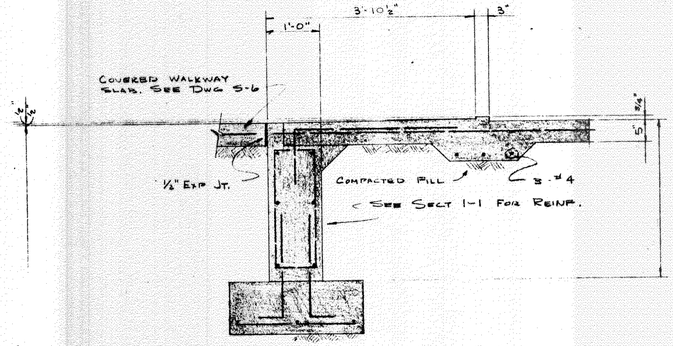

SECTION 2-2

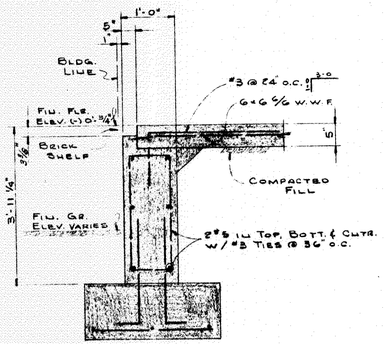

SECTION 3-3

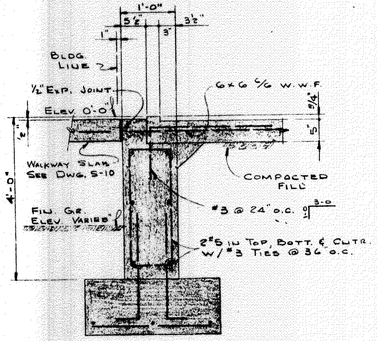

SECTION 4-4

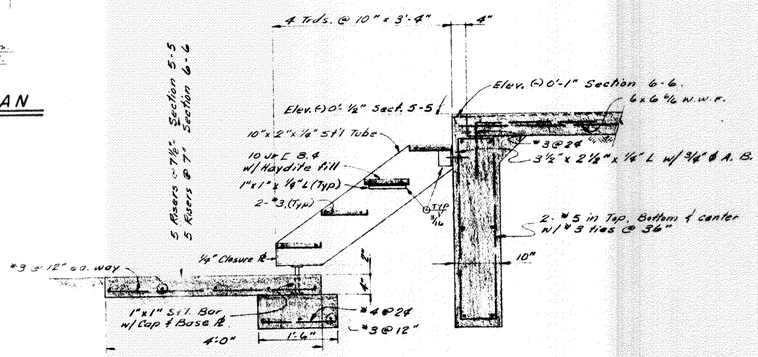

SECTION 5-5 as noted

SECTION 6-6 as noted

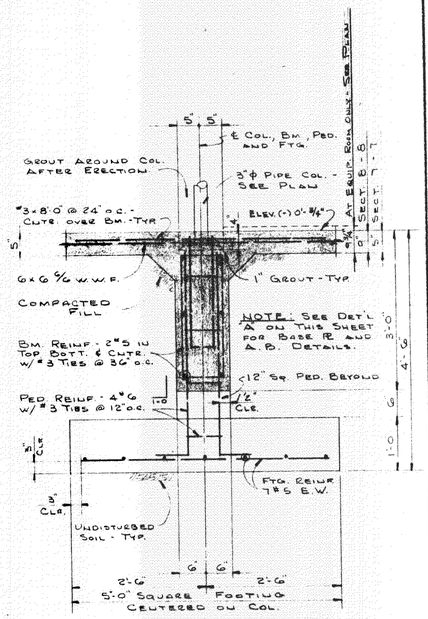

SECTION 7-7 as noted

SECTION 8-8 as noted

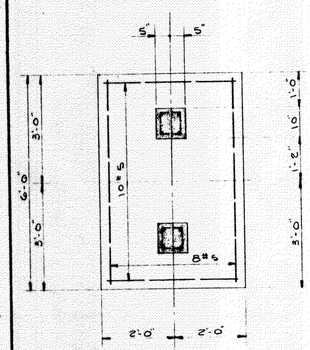

PLAN

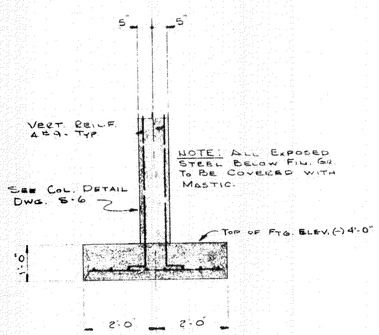

SECTION

TYPICAL EXTERIOR FOOTING

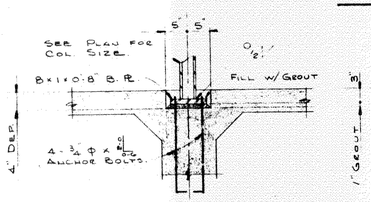

DETAIL 'A'

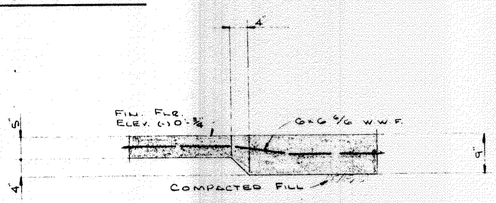

SECTION 9-9

our lady of lourdes catholic church and rectory

slidell, louisiana

date	12-7-61
scale	1/8" = 1'-0"
drawn	Fabre
checked	
revised	

S-7

22 of 35