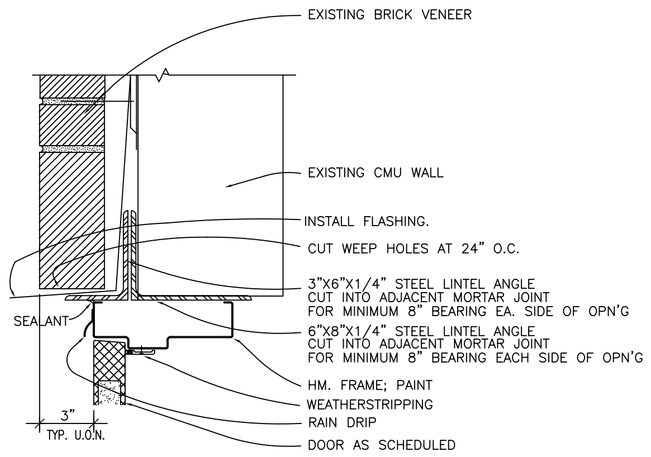

1 H.M. DOOR HEAD DETAIL
3" =1'-0"

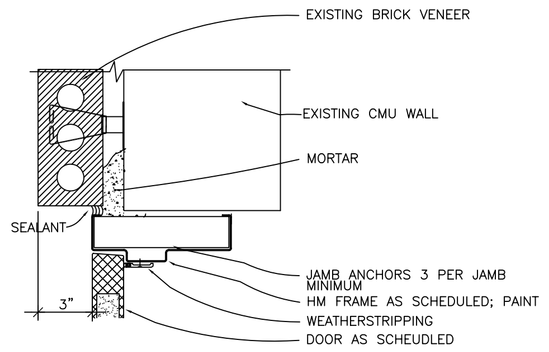

2 H.M. DOOR JAMB DETAIL
3" =1'-0"

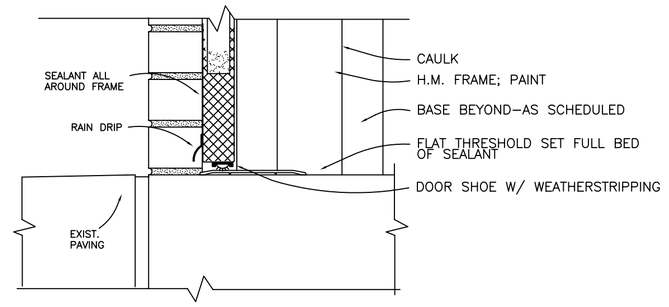

3 H.M. DOOR SILL DETAIL
3" =1'-0"

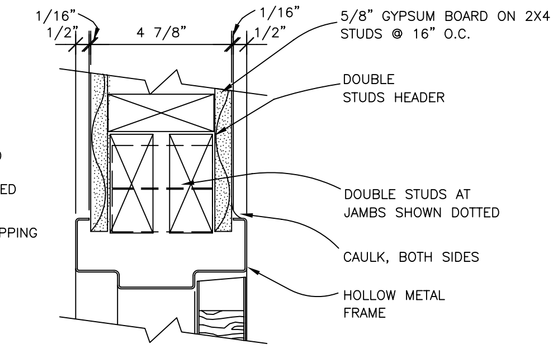

4 DR. HEAD/JAMB SIM.
SCALE: 3" = 1'-0"

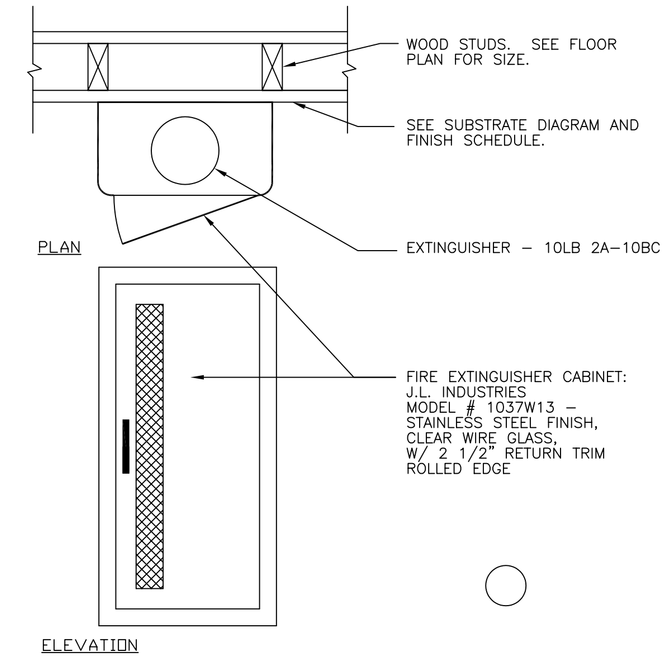

5 FIRE EXT. CABINET
1" = 1'-0"

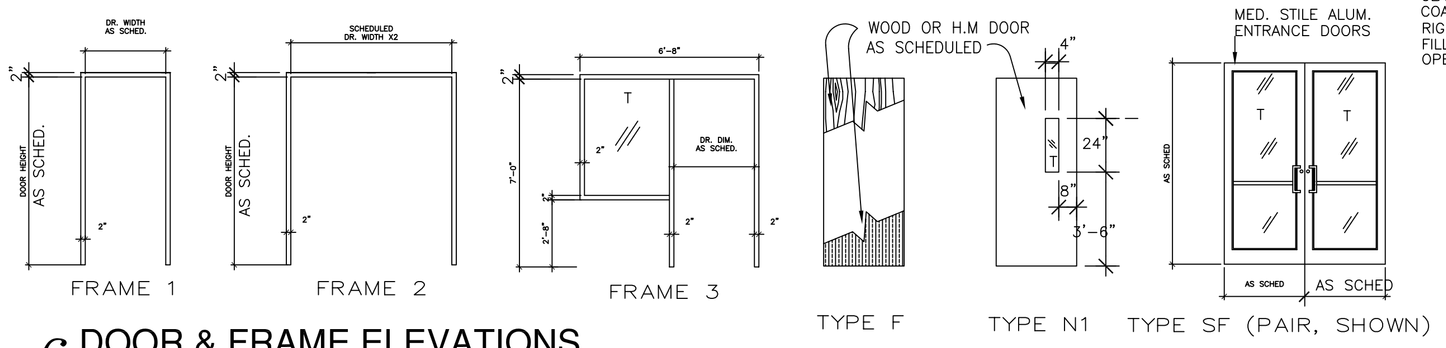

6 DOOR & FRAME ELEVATIONS
SCALE: 1/4" = 1'-0"

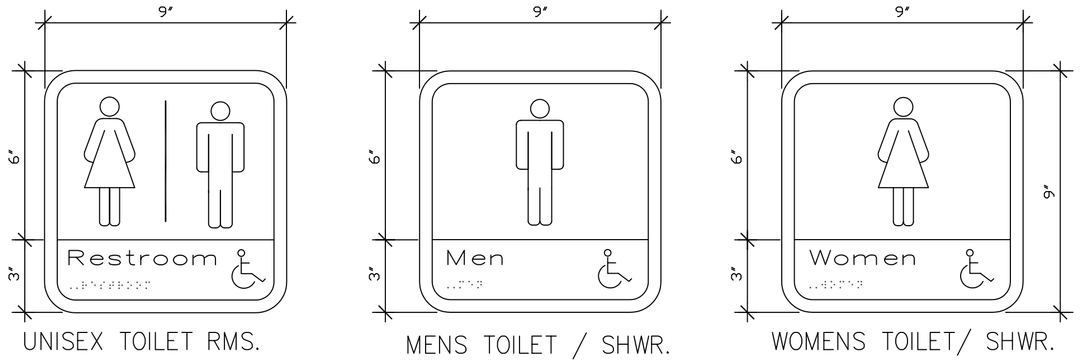

UNISEX TOILET RMS. MENS TOILET / SHWR. WOMENS TOILET/ SHWR.

7 GRAPHIC SYMBOL SIGNS
SCALE 3" = 1'-0"

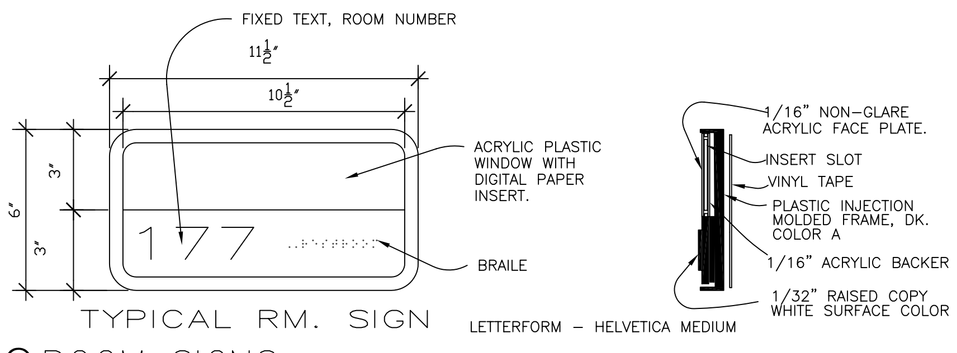

8 ROOM SIGNS
SCALE 3" = 1'-0"

GENERAL NOTES:
1. ROOM SIGNS SHALL BE EQUAL TO "ASI INTOUCH" SERIES WITH "WS" SERIES "WINDOW SIGN" WITH DIGITAL NAME INSERT. W/ ADA COMPLIANT ROOM NUMBERS AND BRAILLE CHARACTERS
2. PROVIDE SIGNAGE AT ALL INTERIOR DOORS
3. IN ADDITION TO ROOM SIGNAGE, PROVIDE LOW LEVEL MOUNTED EXIT SIGNAGE AT ALL EXTERIOR EXIT DOORS AND STAIR EXIT DOORS.

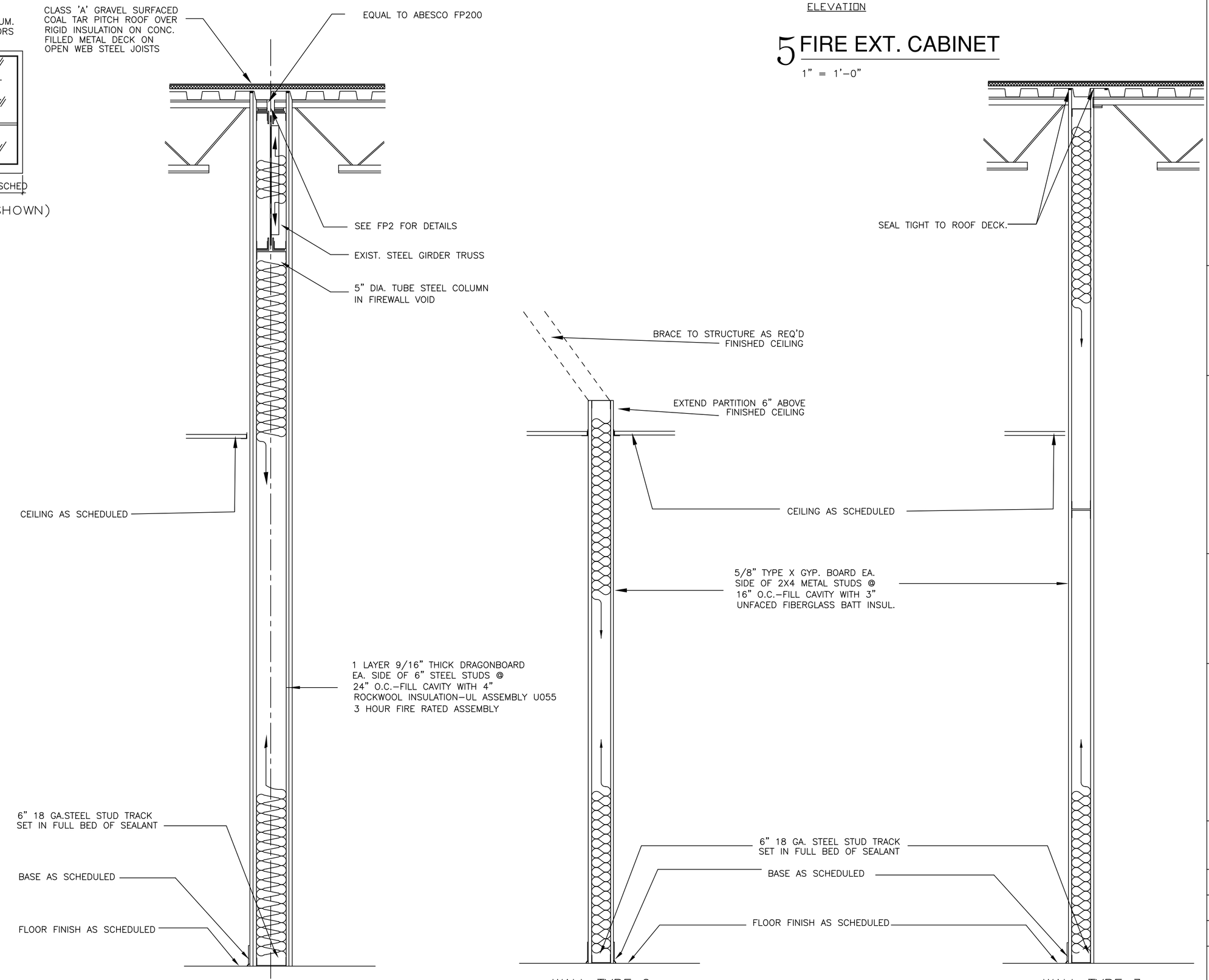

9 WALL TYPES
NOT TO SCALE

DAMMON ENGINEERING, INC.

CHIEF ENGINEER
EMMETT
DAMMON, P.E.

CHIEF ARCHITECT
ROBERT
WILTSE

1095 FLORIDA AVENUE
SLIDELL, LA. 70458
OFFICE: 985-649-5832
FAX: 985-641-5950

WEBSITE:
WWW.DAMMONENGINEERING.COM

EMAIL:
DAMMONENG@BELLSOUTH.NET

ARCHITECTURE

ENGINEERING

STUDIES

PLANNING

INVESTIGATION

EXPERT WITNESS

NORTHSHORE
CHURCH
KENSINGTON DR.
SLIDELL, LA

DETAILS
WALL TYPES

REV: #1 06-08-09

SCALE: AS NOTED

JOB#: 1988

DATE: 09-30-08

SHEET

A-3

OF