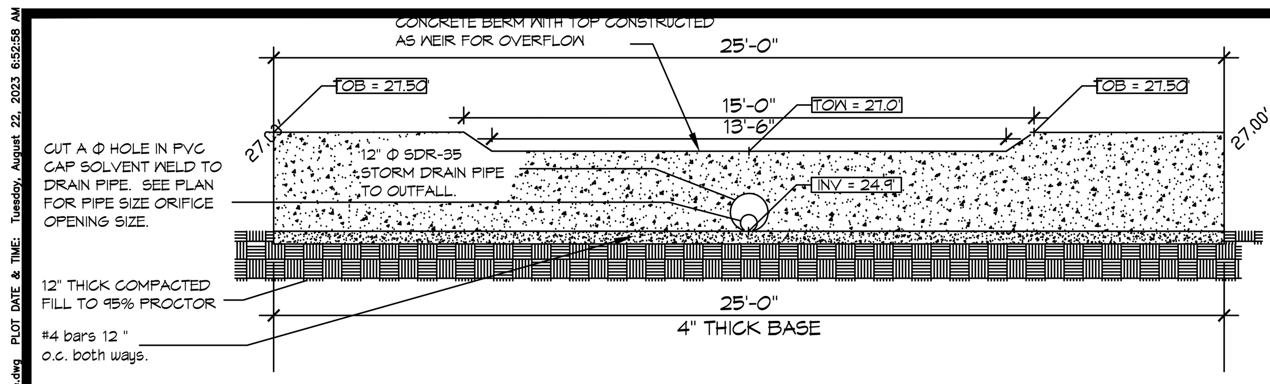

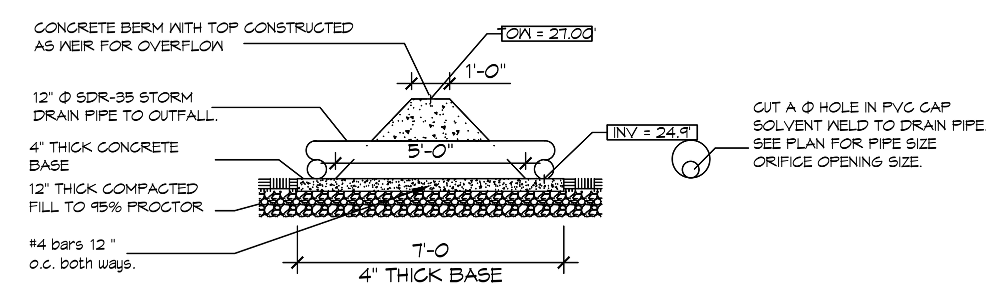

D SECTION
SCALE: NTS

BERM & WEIR

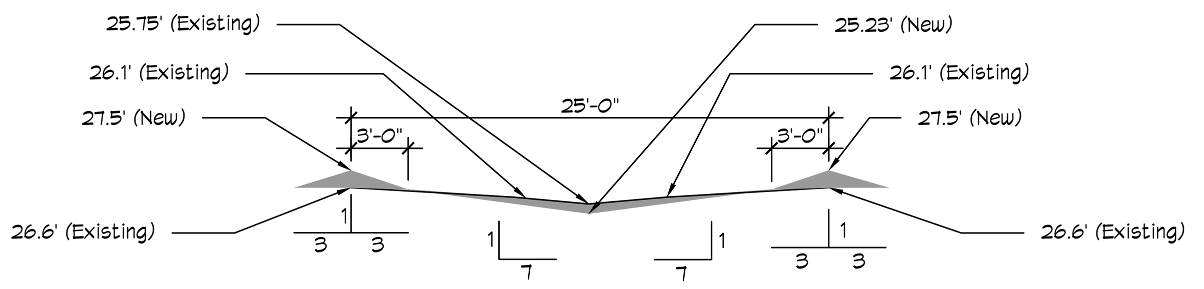

C SECTION
SCALE: NTS

TYPICAL RESHAPED SWALE FOR DETENTION

FILL CALCS
74.05 s.f. (Section B) x 52.75 ' (Section A) = 3,906 c.f.
36.35 s.f. (Section A) x 93.50 ' (Section B) = 3,399 c.f.
Average Fill Calcs = 3,653 c.f.

RE-SHAPE EXISTING 25' SWALE
3 sections of swale average 3.95 s.f. x 183 linear ft long
Average Fill Calc for Swale = 723 c.f.

(NOTE: ALL SIDEWALKS and DRIVES ARE LEVEL WITH EXISTING GRADES)

Fill Total = 4,376 c.f.

SWALE BETWEEN BUILDING CUT CALCS
AVERAGE AREA = 1.32 s.f. & 1.15 s.f. = 1.38 s.f.
LENGTH OF SWALE = 133 ft
Volume of SWALE CUT = 183 c.f.

RE-SHAPE EXISTING 25' SWALE CUT CALCS
3 sections of swale average 4.95 s.f. x 183 linear ft long
Average Fill Calc for Swale = 906 c.f.

WOODED AREA CUT CALCS
Slope the first 2 feet of the perimeter of cut area with 1H:0.2V Slope
The area to be cut has a cross section of 85.3 s.f. and width of 40.75' (minus 2 ft for slope); 85.3 s.f. x 38.75 ft = 3,305 c.f.

CUT Totals : 4,394 c.f.

4 DETAIL
SCALE: NTS

NO NET FILL CALCULATIONS

GENERAL SITE DRAINAGE NOTES

1. REMOVE DEBRIS AND CLEAN BOTTOM OF EXISTING SWELL.
2. ALL ELEVATIONS SHOWN ARE M.S.L. AND ARE PLUS OR MINUS
3. FIELD VERIFY ALL ELEVATIONS AND AND DRAINAGE SYSTEM PLACEMENT PRIOR TO START OF WORK.

SITE DRAINAGE LEGEND

TG=100.0'	TOP OF GRATE
INV=100.0'	INVERT OF PIPE
— ST — ST — ST —	NEW SUBSURFACE DRAINAGE PIPE
→	DRAINAGE FLOW DIRECTION ARROW
(shaded area)	AREA OF DETAINED RAINWATER

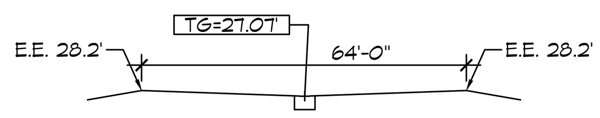

E SECTION
SCALE: 1"=30'

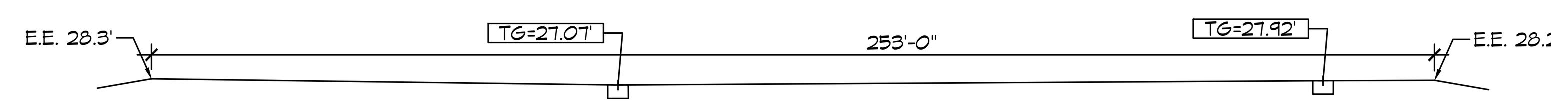

F SECTION
SCALE: 1"=30'

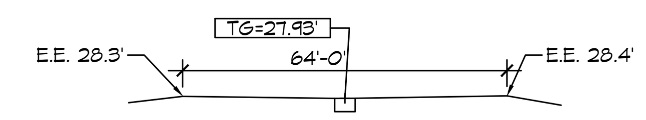

G SECTION
SCALE: 1"=30'

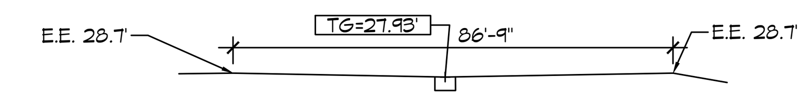

H SECTION
SCALE: 1"=30'

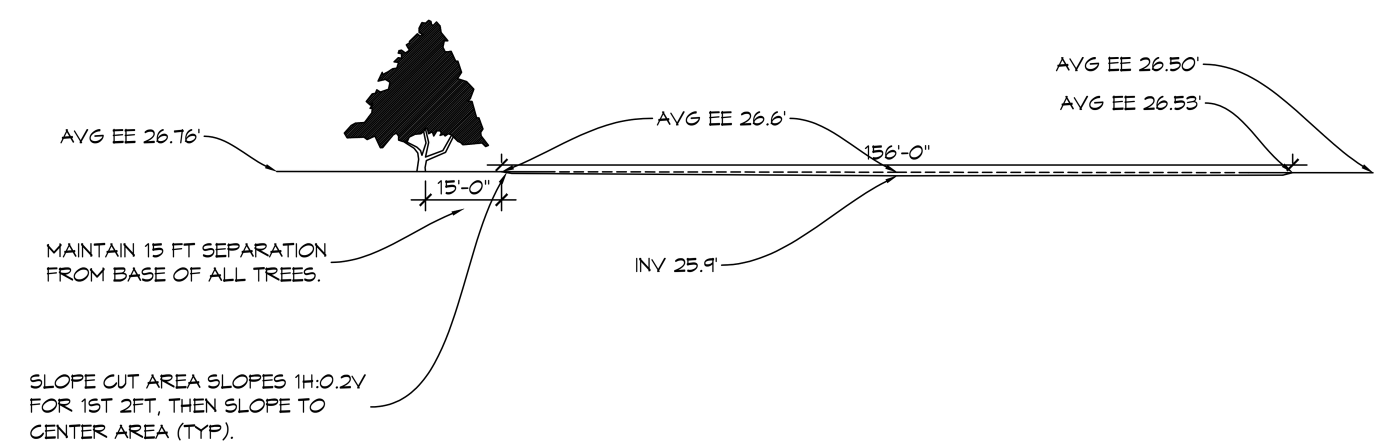

J SECTION
SCALE: 1"=30'

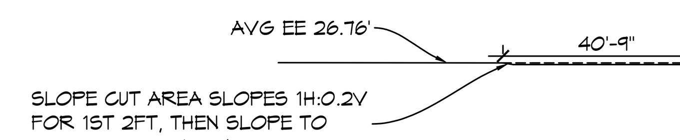

K SECTION
SCALE: 1"=30'

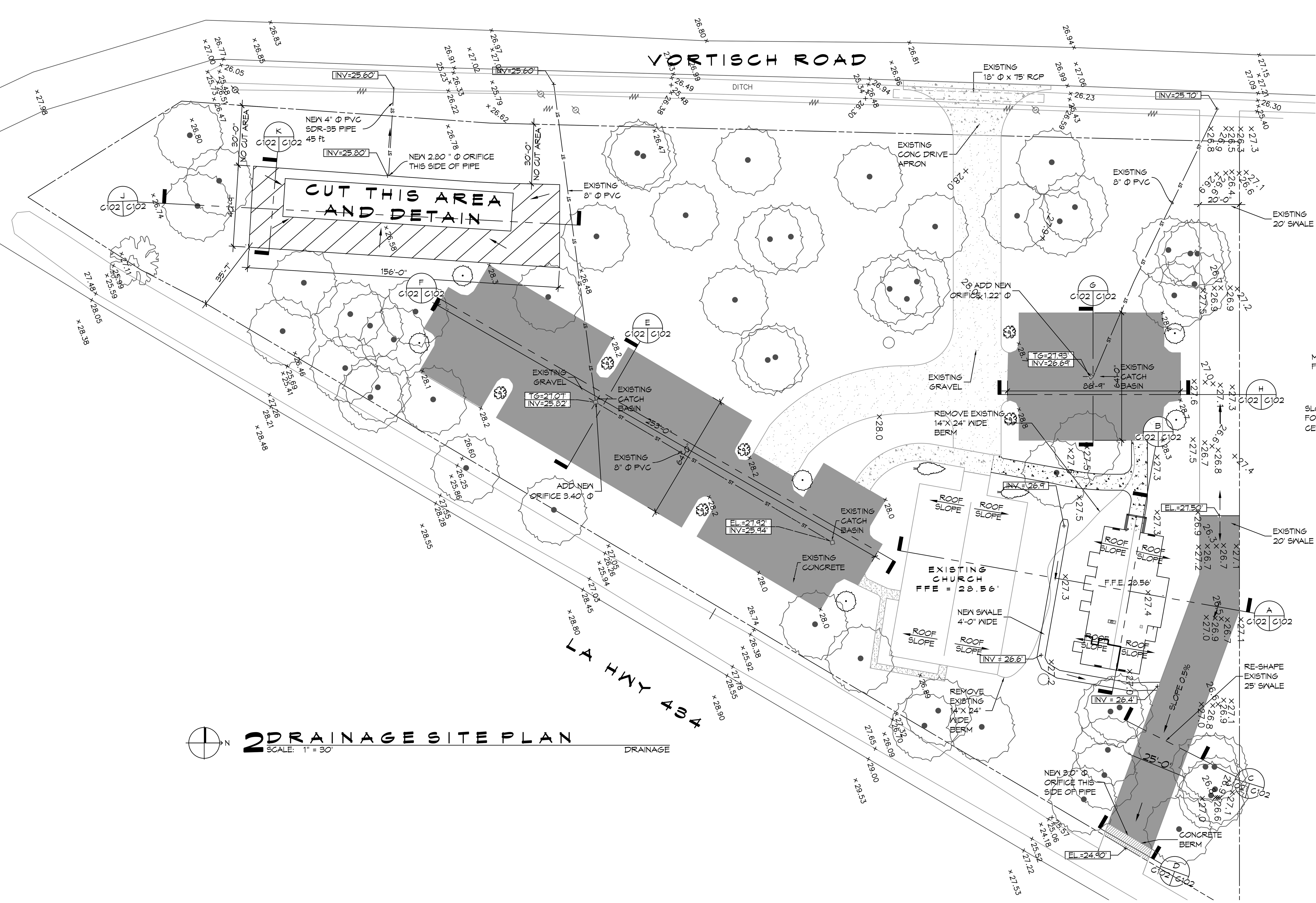

2 DRAINAGE SITE PLAN
SCALE: 1" = 30'

DRAINAGE

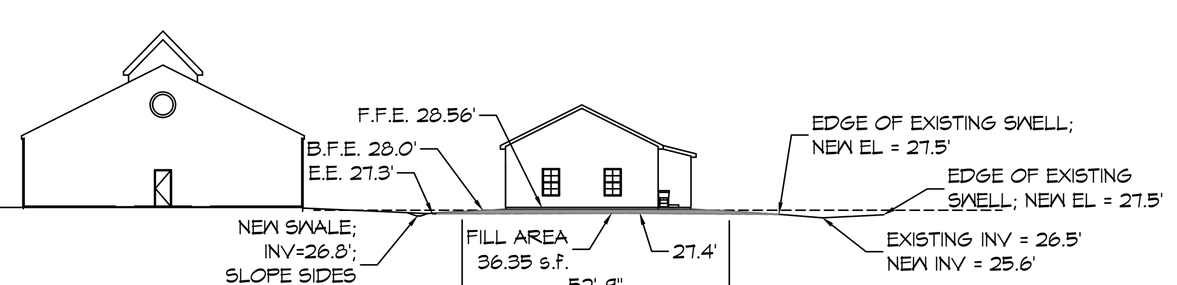

A SECTION
SCALE: NTS

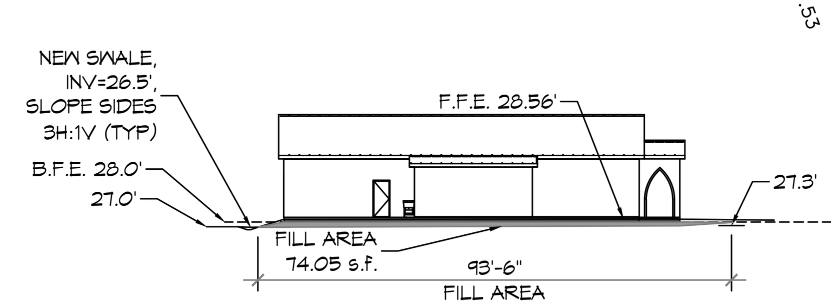

B SECTION
SCALE: NTS

DAMMON ENGINEERING, INC.
LOUISIANA & MISSISSIPPI
Chief Engineer: Brian Mistich, PE
554 Old Spanish Trail
Slidell, LA 70458
www.dammonengineering.com
info@dammonengineering.com
PH: 985.649.5832

#	DESCRIPTION	REVISIONS	DATE

SEAL:
STATE OF LOUISIANA
BRIAN A. MISTICH
License No. 30187
PROFESSIONAL ENGINEER

MULTI PURPOSE BUILDING
OUR LADY OF FATIMA
66110 VORTISCH ROAD
LACOMBE, LOUISIANA 70445

JOB No:	2370	DATE:	08-22-2023
DRAWN BY:	CKD	CHECKED BY:	CKD

The above drawings and specifications, designs and arrangements represented thereby are and shall remain the property of Dammon Engineering, and no part thereof shall be copied, disclosed to others, or used in connection with any work or project other than the specific project for which the have been prepared and developed without written consent of Dammon Engineering. Visual contact with these drawings or specifications shall constitute conclusive evidence of acceptance of these restrictions.

SHEET TITLE:
SITE PLAN - DRAINAGE

DRAWING NUMBER:
C102