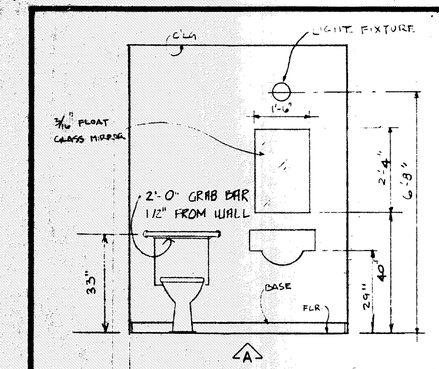

TYP. TLT. FOR SEMI-PRIVATE RMS.

TYPE A ROOMS - EXTERIOR SIDE SIMILAR

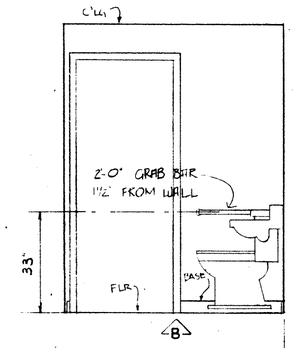

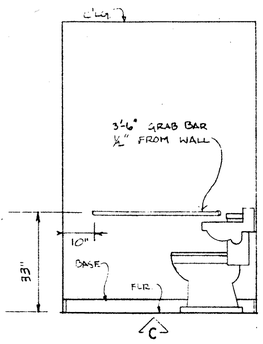

TLT. FOR RMS. 45,46,47

TYPE A ROOMS - ATRIUM SIDES SIMILAR

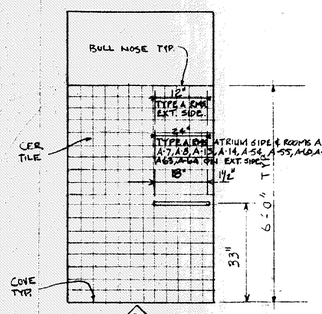

TYP. SHOWER END WALL

SEE ¼" FLOOR PLAN FOR LOCATION OF SHOWER SEAT

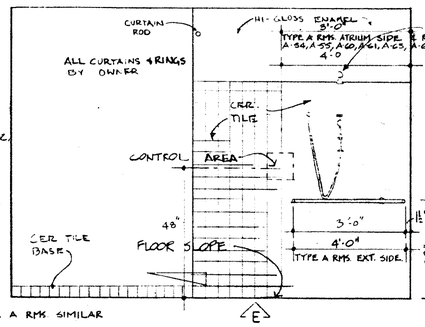

SHOWER IN TYPE A RMS SIMILAR

TYP. SHOWER SIDE WALL

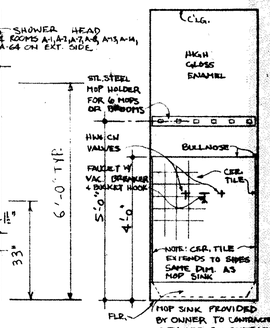

MOP SINK ELEV.

SCALE ½"=1'-0"

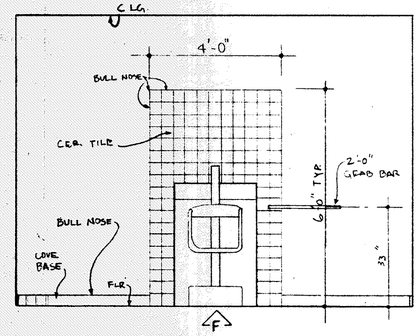

CENTURY TUB RM. #109

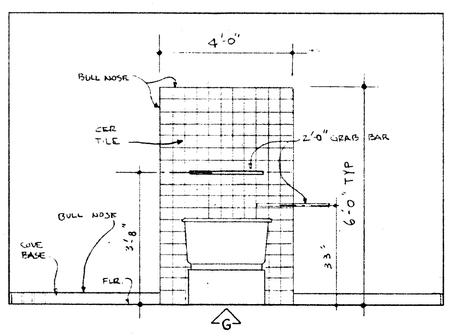

PIER TUB RM. #108

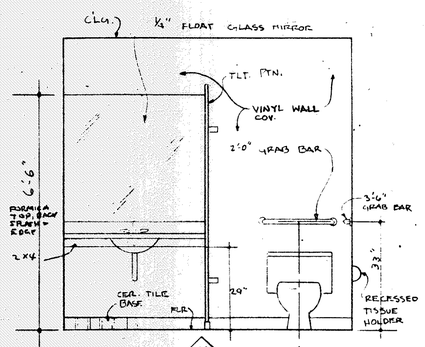

MEN'S RM.

LADIES RM. SIMILAR

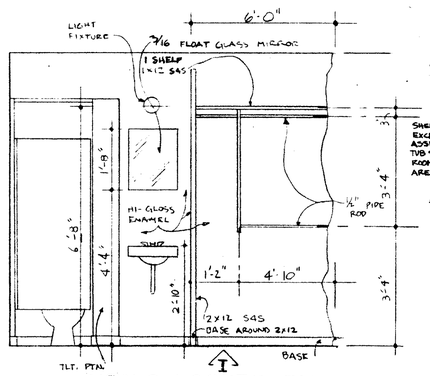

MEN'S LOCKER RM.

WOMENS LOCKER RM. SIMILAR

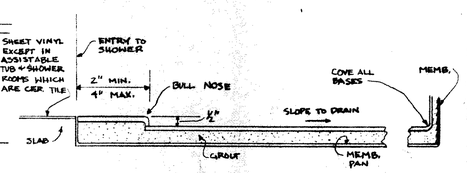

SHOWER FLOOR LIP DETAIL

SCALE 3"=1'-0"

INTERIOR ELEV.

SCALE: ¼" = 1'-0"

* NOTE: PAINT ALL WALLS IN TLTS. & BARS HI-GLOSS ENAMEL UNLESS OTHERWISE NOTED

DOOR SCHEDULE

ALL DOORS ARE 6'8" HIGH UNLESS SPECIFICALLY NOTED OTHERWISE

MARK	SIZE	DESCRIPTION
1	3'8 X 1 3/4"	GLASS ALUMINUM ENTRANCE, BRONZETONE FINISH W/ SAFETY GLASS; PANIC HDW; CLOSER; (MAY BE 7' HIGH AT OPTION OF GENERAL CONTRACTOR - COORDINATE ADJACENT WALL AND WDW FRAMING HTS. TO BE EITHER 6'8" OR 7'0", ALL MATCHING.)
1-A	8'0" HIGH	
2	3'8 X 1 3/4"	WOOD SOLID CORE, EXT. GRADE, PANIC HDW; CLOSER ; FLUSH PANEL.
3	3'0 X 1 3/4"	GLASS ALUMINUN ENTRANCE, BRONZETONE FINISH; SAFETY GLASS; NO PANIC HDW; CLOSER.
4	3'8 X 1 3/4"	SOLID CORE FLUSH PANEL
5	3'0 X 1 3/8"	HOLLOW CORE, FLUSH PANEL, LAUAN. NOTE: TYPICAL OCCUPANT ROOM CLOSETS HAVE BI-PASSING DOORS.
6	2'8 X 1 3/8"	HOLLOW CORE, FLUSH PANEL, LAUAN
7	2'6 X 1 3/8"	HOLLOW CORE, FLUSH PANEL, LAUAN
8	2'0 X 1 3/8"	HOLLOW CORE , FLUSH PANEL, LAUAN
9	1'8 X 1 3/8"	HOLLOW CORE, FLUSH PANEL, LAUAN
10	3-0 X 1 3/4"	SOLID CORE FLUSH PANEL, ONE LIGHT 24" SQ.; FORMICA-CLAD ALL SURFACES AND EDGES; DOUBLE-ACTING, (KITCHEN)
11	3'0 X 7'6 X 1 3/4"	FLUSH PANEL HOLLOW METAL, GALV; PAIR (LAUNDRY) VERIFY HT. AT ATRIUM
12	3'0 X 1 3/4"	FLUSH PANEL, HOLLOW METAL, GALV.
13	2'6 X 1 3/4"	FLUSH PANEL, HOLLOW METAL, GALV. PAIR
14	6'0 X 6'8	PATIO TYPE BRONZETONE ALUMINUM, CLEAR SAFETY GLASS; OR TEMPERED GLASS; SCREEN ON "X" PANELS ONLY.
15	8'0 X 6'8	SAME AS TYPE 14.
16	12'0 X 8'0	4 PANEL OXXO, SAME AS TYPE 14
17	3'8 X 1 3/4" FIRE DOORS	U.L. RATED 3-HOUR FIRE DOORS; FLUSH PANEL; SOLID CORE; WITH ELECTRONIC HOLD-OPEN DEVICES CONNECTED TO SMOKE ALARM SYSTEM AND AIR-HANDLING EQUIPMENT, AS PER CODES; PAIR; U.L. RATED FRAME.
18	3'8 X 1 3/4" SMOKE DOORS	WOOD, FLUSH PANEL, SOLID CORE; (SAME TYPE AS DOOR #4;) PAIR; WHEN CLOSED THERE SHALL BE NO GAP LARGER THAN 1/8".
19	12'0 X 6'8	SAME AS TYPE 14; OXXO.
20	16'0 X 8'0	SAME AS TYPE 14; OXXO.
21	3'0 X 1 3/4"	FLUSH PANEL, SOLID CORE, EXTERIOR GRADE; LAUAN.
22	3'0 X 1 3/4"	FLUSH PANEL, SOLID CORE, LAUAN, DOUBLE-ACTING, 45 MIN. U.L LABEL DOOR & FRAME
23	3'8 X 1 3/4"	GLASS ALUMINUM ENTRANCE, BRONZETONE FINISH; SAFETY GLASS; NO CLOSER OR THRESHOLD.
24	2'8 X 1 3/8	FLUSH PANEL SOLID CORE, LAUAN; ONE LIGHT CLEAR GLASS 22" X 38"

NOTE: ALL DOOR SIZES SHALL BE VERIFIED IN ADVANCE OF FRAMING, AND ORDERING, TO ACCOMMODATE ANY AND ALL EQUIPMENT WHICH MUST PASS THRU THE DOOR. HOLLOW METAL DOOR FRAMES TO BE USED THROUGHOUT. WOOD FRAMES OPTIONAL EXCEPT WHERE HOLLOW METAL OR LABELED DOORS OCCUR

WINDOW SCHEDULE

MARK	SIZE	DESCRIPTION
A	3'0 X 4'0	PAIR; SINGLE-HUNG BRONZETONE ALUM; 4 HORIZ. LITE; HALF-SCREEN WITH CLEAR INSULATING GLASS, EQUAL TO ALENCO, MAYFAIR, GENERAL ALUMINUM; (CAN BE PAIR IN SINGLE FRAME).
B	4'0 X 4'0	PAIR; SAME AS TYPE "A".
C	VARIES	FIXED GLASS, CLEAR GLASS; FLOAT PLATE GLASS SIZED TO FIT CODE AND STRENGTH OF OPENING REQUIREMENT - NOT LESS THAN 3/16", NOT MORE THAN 1/4" ; ALUMINUM SASH SHALL BE EQUAL TO HOWMET SERIES FS- 4" MULS; BRONZETONE FINISH. SILLS BELOW 30" SHALL HAVE TEMPERED OR SAFETY GLASS. SIZE GLASS AS PER CODES; WHERE "TINTED" GLASS IS NOTED ON PLANS, GLASS SHALL BE BRONZE TINTED.
D	VARIES	FIXED 3/16" OR 1/4" FLOAT GLASS (CLEAR) IN WOOD STOPS AND TRIM; GLASS SIZED AS PER CODES AND STRENGTH REQUIREMENTS; SILL HEIGHT 36" ABOVE FLOOR; HEAD HEIGHT 72" ABOVE FLOOR.
E	VARIES	FIXED 1/4" CLEAR FLOAT GLASS IN WOOD STOPS AND TRIM; SILL HT. 4" ABOVE FLOOR. HEAD HEIGHT EITHER 6'8" OR 7'0" ABOVE FLOOR TO CORRESPOND WITH ADJACENT DOOR HEIGHT AT CONTRACTOR'S OPTION; TEMPERED OR SAFETY GLASS.
F	VARIES	FIXED 1/4" FLOAT GLASS IN WOOD STOPS AND TRIM, SAME AS TYPE "E", EXCEPT ALL SILLS 36" ABOVE FLOOR, AND ALL HEADS 80" ABOVE FLOOR.
G	VARIES	SAME AS TYPE "D", EXCEPT SILL HEIGHT OCCURS AT TOP OF NURSES STATION COUNTERS, AND HEAD HEIGHTS ARE 80" ABOVE FLOOR.
H	SKYLIGHTS IN ATRIUM:	EQUAL TO SKYKREST MODEL S-2, SELF-FLASHING, SIZE 4848; DOUBLE DOME BRONZE REFLECTIVE ACRYLIC WITH LOWER SURFACE OF OUTER DOME REFLECTIVE, AND LOWER DOME CLEAR ACRYLIC. AVAILABLE AT SHELTON BUILDING MATERIALS, KENNER, PHONE 466-9366.
J	SKYLIGHTS IN LAUNDRY AND KITCHEN:	SAME AS TYPE "H", EXCEPT SIZE 3636.
K	3'0 X 3'0	ALUM HORIZ. SLIDING EQUAL TO ALENCO, OR MAYFAIR, CLEAR GLASS, NO SCREEN, BRONZETONE FINISH.
L	KRINKELGLASS	IN WOOD STOPS, SEE DETAIL. ALLOW TOTAL OF $600 FOR ALL 8 PANELS OF KRINKELGLASS ONLY, COLOR AND THICKNESS SELECTED BY ARCHITECT.

NOTE: SEE SCHEDULE OF ALL SHELVES IN DIVISION 6 OF THE SPECIFICATIONS.

THESE PLANS WERE PREPARED BY ME OR UNDER MY DIRECT SUPERVISION, AND TO THE BEST OF MY KNOWLEDGE AND BELIEF THEY COMPLY WITH ALL STATE AND PARISH REGULATIONS.
AT ANY RATE FURNISHING THE CONTRACT ADMINISTRATION DURING CONSTRUCTION.

J. M. Huddleston

J. M. HUDDLESTON No. 3338 STATE OF LOUISIANA REGISTERED ARCHITECT

FINISH SCHEDULE

SPACE	FLOOR: 1/8" VINYL-COMPOSITION TILE	FLOOR: CARPET	FLOOR: CERAMIC TILE	FLOOR: SHEET VINYL	FLOOR: NON-SKID COMPOSITION TILE	FLOOR: TROWEL-FIN. CONCRETE	FLOOR: TROWEL-FIN. CONC. TREATED	BASE: VINYL OR RUBBER	BASE: WOOD - 306 MOULDING	BASE: CERAMIC TILE	BASE: NONE	WALL: PAINTED SHEETROCK	WALL: VINYL WALL COVERING - THIN	WALL: VINYL WALL COVERING - MED.	WALL: CERAMIC TILE - PARTIAL	WALL: PAINTED CONCRETE BLOCK	WALL: NO PAINT ON SHEETROCK	CEILING: SPRAYED ACOUSTIC	CEILING: MEDIUM TEXTURE	CEILING: PAINTED SHEETROCK	CEILING: NO PAINT ON SHEETROCK	CEILING: SUSPENDED TYPE 1	CEILING: SUSPENDED TYPE 2	REMARKS
																							SEE 1/4" PLANS AND ROOM ELEVATIONS FOR LOCATIONS OF CERAMIC TILE ON WALLS. ALL CERAMIC TILE ON WALLS IS NOT OVER 6' ABOVE FLOOR. ALL GYPSUM BOARD THROUGHOUT PLDG. TO BE 5/8" FIRE RATED TYPE.
1-87 GUEST ROOM	●							●				●						●					
1-87 GUEST RM. TLT.				●				●				●						●					
A-1-A-69 GUEST ROOM	●							●				●						●					VWC 1 WALL
A-1-A-69 GUEST TLT.				●				●				●								●			
88 NURSES STA. #1	●							●				●						●					
89 NURSES STA. #2	●							●				●						●					
90 NURSES STA. #3	●							●				●						●					
91 NURSES STA/ #4	●							●				●						●					
92 DISPENSARY	●							●				●						●					
93 DISPENSARY	●							●				●						●					
94 DISPENSARY	●							●				●						●					
95 DISPENSARY	●							●				●						●					
96 DIET KITCHEN	●							●				●						●					
97 DIET KITCHEN	●							●				●						●					
98 DIET KITCHEN	●							●				●						●					
99 DIET KITCHEN	●							●				●						●					
100 SOILED UTILITY	●							●				●								●			
101 SOILED UTILITY	●							●				●								●			
102 SOILED UTILITY	●							●				●								●			
103 SOILED UTILITY	●							●				●								●			
104 CLEAN UTILITY	●							●				●								●			
105 CLEAN UTILITY	●							●				●								●			
106 CLEAN UTILITY	●							●				●								●			
107 CLEAN UTILITY	●							●				●								●			
108 ASSIST TUB			●							●					●					●			CER TILE BASE-COVE
109 ASSIST TUB			●							●					●					●			" " " " "
110 ASSIST TUB			●							●					●					●			" " " " "
111 ASSIST TUB			●							●					●					●			" " " " "
112 ASSIST TOILET			●							●					●					●			" " " " "
113 ASSIST TOILET			●							●					●					●			" " " " "
114 SHOWERS			●							●					●					●			" " " " "
115 SHOWERS			●							●					●					●			" " " " "
116 CLEAN LINEN	●							●				●								●			
117 CLEAN LINEN	●							●				●								●			
118 CENTRAL SUPPLY	●							●				●								●			
119 CENTRAL SUPPLY	●							●				●								●			
120 NURSES TOILET				●				●				●						●					
121 NURSES TOILET				●				●				●						●					
122 NURSES TOILET				●				●				●						●					
123 STORGAE (N.S. 3)								●				●								●			
124 STORAGE (N.S. 4)	●							●				●								●			
125 ACTIVITIES & THERAPY	●							●				●						●					
126 DIRECTOR - ACTIV	●							●				●						●					
127 STORAGE - ACTIV	●							●				●						●					
128 ACTIVITIES & THERAPY	●							●				●										●	CLG. HT 9'-0" - ARMSTRONG FISSURED MINABOARD OR EQ.
129 DIRECTOR - ACTIV	●							●				●										●	" " " "
130 STORAGE - ACTIV	●							●				●										●	" " " "
131 EMPLOYEES RM. A	●							●				●		●				●					
132 EMPLOYEES RM. B	●							●				●		●								●	CLG. HT. 9'-0"
133 UNIT LOUNGE	●							●				●		●				●					
134 ATRIUM		●						●					●					●					SEE PLAN FOR VARIATIONS IN FLOOR HGT.
135 SOLARIUM "A"	●							●					●					●					
136 SOLARIUM "B"	●							●					●					●					
137 LAUNDRY					●			●					●								●		
138 STORAGE - LAUNDR	●				●			●					●								●		
139 MEN EMPL. LOCKER	●							●					●					●					8'-0" CLG. HT.
140 WOM. EMPL. LOCKER	●							●					●					●					8'-0" CLG. HT.
141 KITCHEN				●				●					●									●	11'-0" CLG HT WASHABLE CLG TILE
142 DISHWASHING				●				●					●									●	10'-0" CLG. HT. " " "
143 DRY STORAGE	●							●					●							●			10'-0" CLG. HT. STICK FRAME
144 KITCHEN OFFICE	●							●					●					●					9'-0" CLG. HT. STICK FRAME
145 KITCHEN JANITOR	●							●					●							●			CER. TILE 5' HIGH AT WALLS AT SINK SIDE, 4" COVE BT.
146 DINING "A" & RED	●							●						●				●					
147 DINING "B"		●							●					●				●					
148 LIVING ROOM			●						●						●			●					
149 BEAUTY & BARBER			●					●						●				●					
150 PERMANENT ROOM			●					●						●				●					
151 STORAGE - BEAUTY	●							●												●			
152 DIR. OF NURSING	●							●						●				●					
153 STORAGE (D.O.N.)	●							●												●			
154 ASST. DIR. OF NU	●							●						●				●					
155 ASST. DIR. OF NU	●							●						●				●					
156 CONFERENCE ROOM				●					●					●				●					
157 VISITORS' LOUNGE	●								●						●			●					CLG. HT. APPROX. 15'-4"
158 RECEPTION	●								●						●			●					
159 BUSINESS OFFICE	●								●									●					
160 MED. RECORDS STO	●																			●			
161 ASSIST. ADMIN.		●							●						●			●					
162 ADMINISTRATOR		●							●						●			●					
163 MARKETING OFFICE		●							●						●			●					
164 LADIES TOILET			●					●						●				●					
165 MEN'S TOILET			●					●						●				●					
166 LADIES TOILET			●					●						●				●					
167 MEN'S TOILET			●					●						●				●					
168 MAINT. & STO.					●			●					●							●			
169 YARD TOOLS					●					●							●				●		
170 STORE ROOM					●			●												●			
171 OXYGEN ROOM					●					●				●							●		
172 ELECTRICAL ROOM					●					●				●							●		
173 JANITOR (N.S.1)			●					●						●						●			
174 JANITOR (N.S.2)			●					●						●						●			
175 JANITOR (N.S.4)			●					●						●						●			
176 STO. (MECH #1)	●									●							●				●		
177 STO. (MECH #3)	●									●							●				●		
178 STO. (MECH #6)					●					●							●				●		
179 MECHNACIAL RM 1					●					●							●				●		
180 MECHANICAL RM 2					●					●							●				●		
181 MECHANICAL RM 3					●					●							●				●		
182 MECHANICAL RM 4					●					●							●				●		
183 MECHANICAL RM 5					●					●							●				●		
184 MECHANICAL RM 6					●					●							●				●		
185 MECHANICAL RM 7					●					●							●				●		CLG. HT 9'-0" STICK FRAME.
186 HALL	●								●				●					●					
187 HALL	●								●				●					●					
188 HALL	●								●				●					●					
189 CORRIDOR	●								●				●					●					
190 CORRIDOR	●								●				●					●					
191 CORRIDOR	●								●				●					●					
192 CORRIDOR	●								●				●					●					
193 CORRIDOR	●								●				●					●					
194 CORRIDOR	●								●				●					●					
195 CORRIDOR	●								●				●					●					
196 CORRIDOR	●								●				●					●					
197 CORRIDOR	●								●				●					●					
198 CORRIDOR	●							●				●						●					
199 CORRIDOR	●							●				●						●					
200 CORRIDOR	●							●				●						●					
201 CORRIDOR	●							●				●						●					
202 CORRIDOR	●							●				●						●					
203 SERVICE CORRIDOR	●							●				●				●		●					
204 SERVICE CORRIDOR	●							●				●						●					

NOTE: TYPE 1 CLGS. SHALL BE SUSPENDED TYPE IN EASTERN OR CHICAGO METALIC BAKED WHITE "T"S; WITH TILE 2' X 4' EQUAL TO ARMSTRONG FISSURED MINABOARD, OR GOLD BOND CLASS 25 NON-DIRECTIONAL.

TYPE 2 CLGS. SHALL BE SUSPENDED TYPE, SAME SUSPENSION AS TYPE 1 ABOVE, WITH 2' X 4' TILES EQUAL TO GOLD BOND "ASBESTIDEL" OR "HUMIGARD".

ABOVE ALL TYPE 2 CEILINGS, LAY-ON INSULATION BATTS R-19, W/ FLAME SPREAD LESS THAN 25 AND SMOKE DEVELOPED FACTOR LESS THAN 450.

HUDDLESTON & WHITE
ARCHITECTS - ENGINEERS
2601 N. HULLEN ST. METAIRIE, LA. 70002
J. M. HUDDLESTON, A.I.A. (504) 887-5250 ■ WILLIAM H. WHITE, P.E. (504) 394-4618

DATE: 9/15/83

SHEET NO. 16 OF 64 SHEETS

CHARLETTE BLUEPRINT, INC. 302928