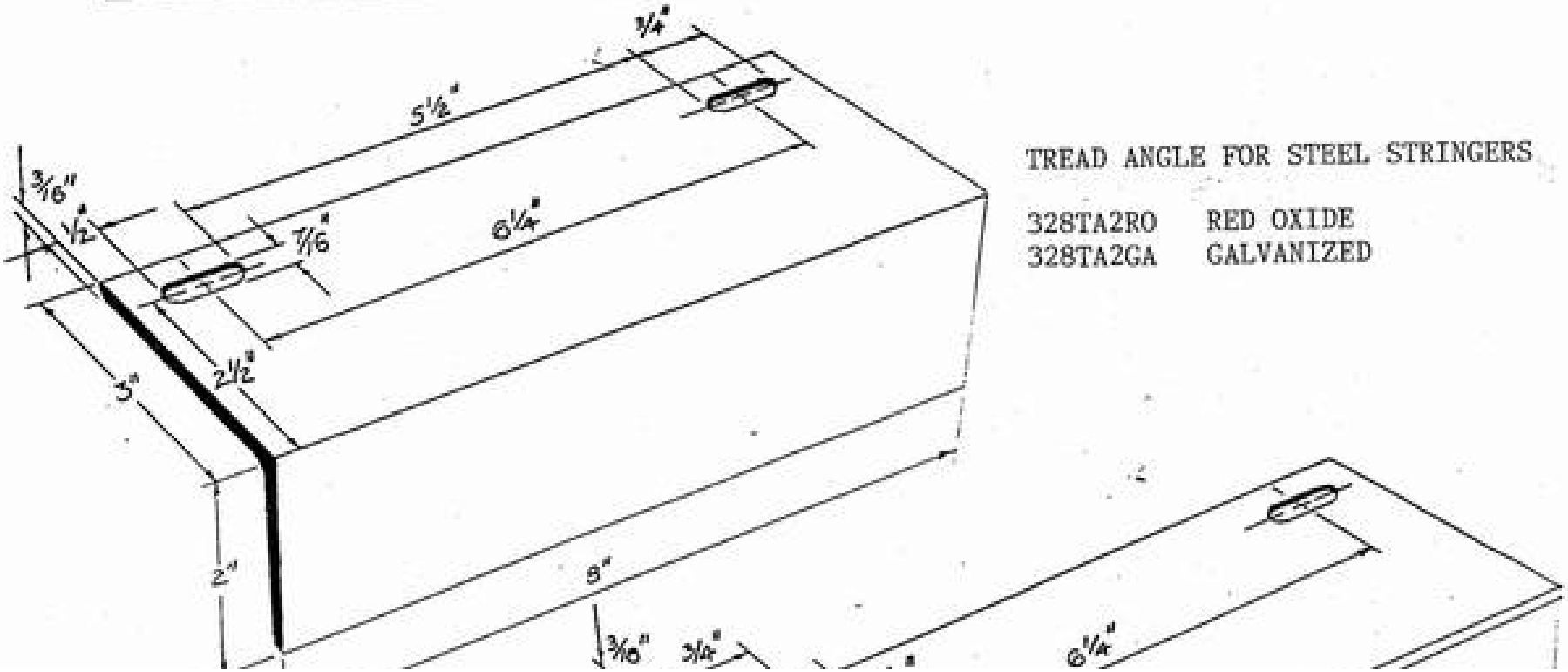

TREAD ANGLE FOR STEEL STRINGERS

328TA2RO	RED OXIDE
328TA2GA	GALVANIZED