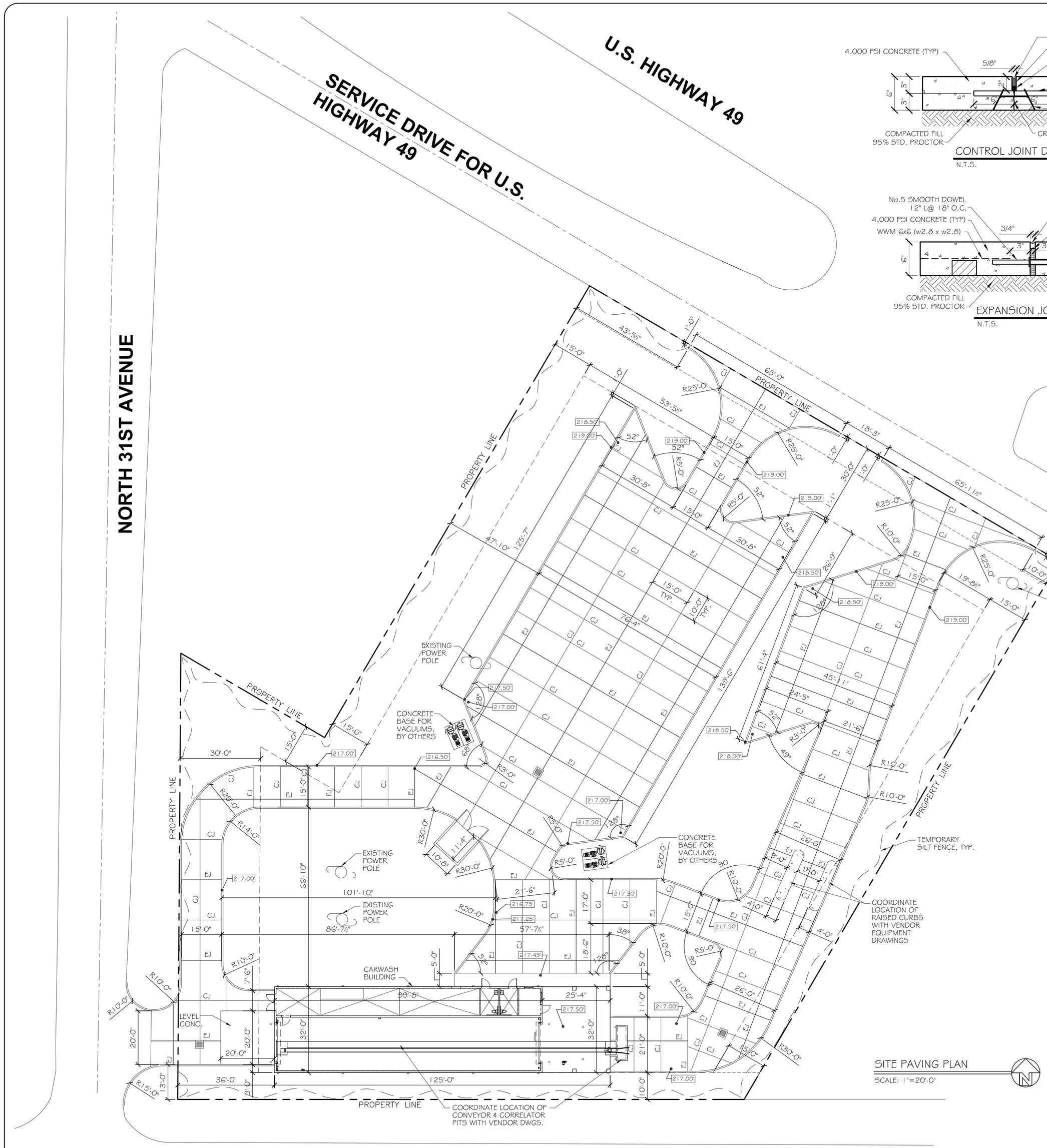

SITE PAVING PLAN

SCALE: 1"=20'-0"

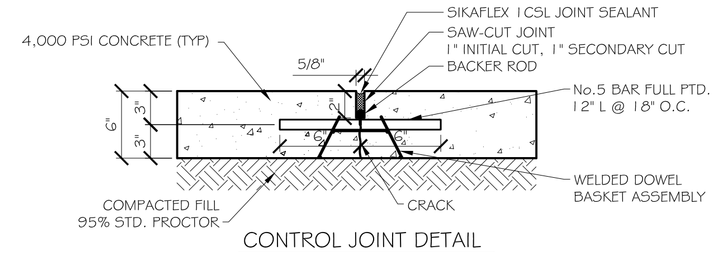

CONTROL JOINT DETAIL

N.T.S.

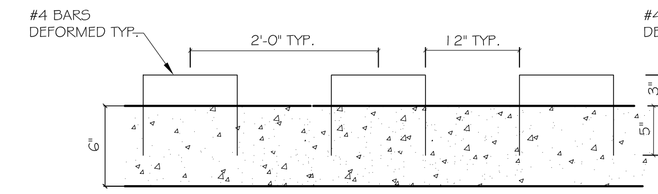

CURB DOWELS

N.T.S.

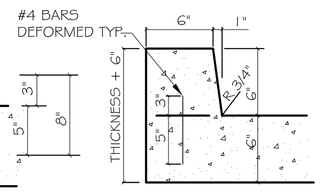

6" BARRIER CONCRETE CURB

N.T.S.

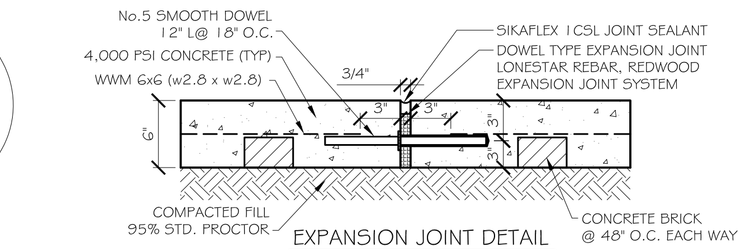

EXPANSION JOINT DETAIL

N.T.S.

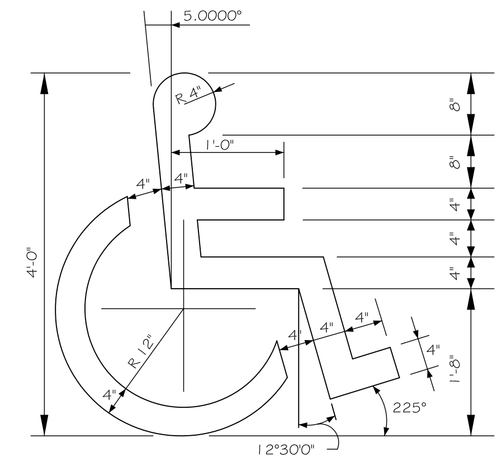

HANDICAP SYMBOL DETAIL

N. T. S.

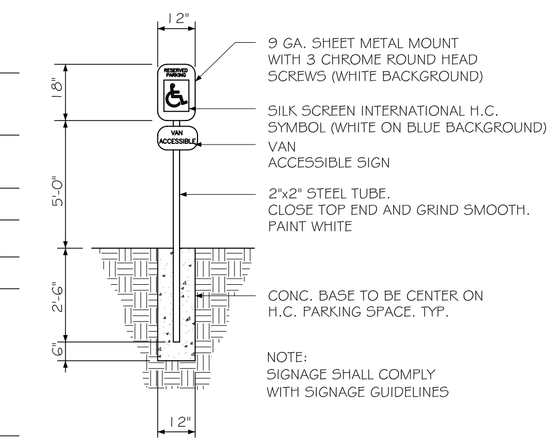

HANDICAP PARKING SIGN

N. T. S.

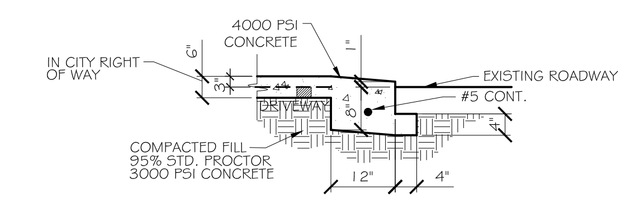

DRIVEWAY SECTION (DS)

N.T.S.

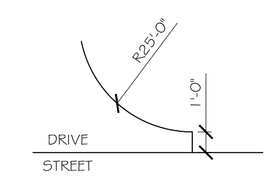

TYPICAL ENTRANCE DETAIL

N.T.S.

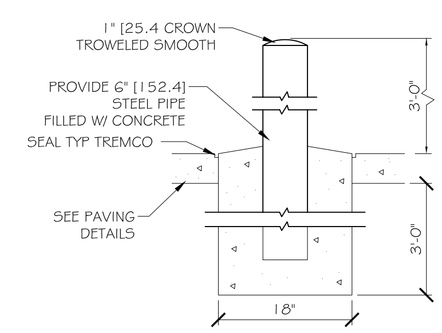

PIPE BOLLARD DETAIL

N. T. S.

LEGEND

- PROPERTY LINE
- BUILDING SETBACK MINIMUM
- CJ — CONTROL JOINT
- EJ — EXPANSION JOINT
- EDGE OF CONCRETE PAVING
- TEMPORARY SILT FENCING
- NEW 6" CURB, SEE DETAIL.
- 00.00 — NEW ELEVATIONS
- NEW DROP INLET w/TEMP. SILT FENCING
- NEW 6" PIPE BOLLARDS

PAVING NOTES:

1) ALL NEW CONCRETE SHALL SHALL HAVE A MINIMUM COMPRESSIVE STRENGTH OF 4,000 PSI AT 28 DAYS AND A MINIMUM THICKNESS OF 6". CONCRETE MIX SHALL BE IN ACCORDANCE WITH THE LATEST REVISION OF ASTM C-150 TYPE I.
2) CONCRETE PAVING THICKNESS SHALL VARY AS FOLLOWS:
   a) APRONS & LOADING AREAS = 8" THICKNESS
   b) DRIVELANES & PARKING AREAS = 6" THICKNESS
3) ALL REINFORCING STEEL SHALL MEET ASTM-A615 (GRADE 60).
4) ALL REINFORCING STEEL SHALL BE SECURELY SUPPORTED TO PREVENT BOTH VERTICAL AND HORIZONTAL MOVEMENT DURING CONCRETE PLACEMENT. ALL CONTROL AND EXPANSION JOINTS SHALL BE LOCATED AND INSTALLED AS SHOWN ON THE PAVING PLAN AND IN ACCORDANCE WITH THE MANUFACTURER'S RECOMMENDATIONS.
5) ALL SUB GRADE FILL SHALL BE SELECT GRANULAR MATERIAL COMPACTED TO 95% STANDARD PROCTOR DENSITY IN A MAXIMUM OF 6" LIFTS.
6) CONTRACTOR SHALL CONTACT THEIR REGULATORY DEPARTMENT OF ENGINEERING PRIOR TO CONDUCTING ANY WORK.
7) ANY WORK WITHIN THE ROADWAY OR ADJACENT TO THE ROADWAY CAUSING AN INTERFERENCE TO VEHICULAR TRAFFIC REQUIRES PRIOR APPROVAL FROM THE CITY TRAFFIC ENGINEERING DIVISION, AND MUST CONFORM TO THE REQUIREMENTS SET FORTH BY THE UNIFORM MANUAL OF TRAFFIC CONTROL DEVICES OF THE STATE OF LOUISIANA. THE CONTRACTOR MUST FURNISH ALL NECESSARY TRAFFIC SIGNS AND/OR BARRICADES AND MAINTAIN THEM DURING CONSTRUCTION ACTIVITY.

DAMMON ENGINEERING, INC.
Architects & Engineers
dammoneng@bellsouth.net
dammoneng.com
PHONE: 985-649-5832
FAX: 985-641-5950
CHIEF ENGINEER: BRIAN MISTICH, P.E.
554 CONSTITUTIONAL TRAIL
SLIDELL, LA 70458

The above drawings and specifications, designs and arrangements represented thereby are and shall remain the property of the undersigned and no part thereof shall be loaned, exhibited to others, copied or reproduced in any form without written permission. The drawings and specifications shall not be used by any person for any purpose other than those authorized by the undersigned. Visual contact with these drawings or specifications shall constitute conclusive evidence of acceptance of these restrictions.

RAINFOREST CARWASH #2
6435 U.S. HWY. 49
HATTIESBURG, MISSISSIPPI 39401

JOB No: 2212	DATE: 10-21-2014
DRAWN BY: CKD	CHECKED BY: CKD

REVISIONS

#	DESCRIPTION	DATE

SITE PAVING PLAN

SHEET No: 05 OF 14

C3