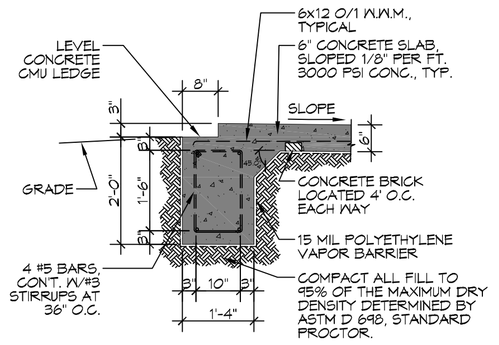

B S102|S101 SECTION
SCALE: 1/2" = 1'-0" AT EXTERIOR WALL

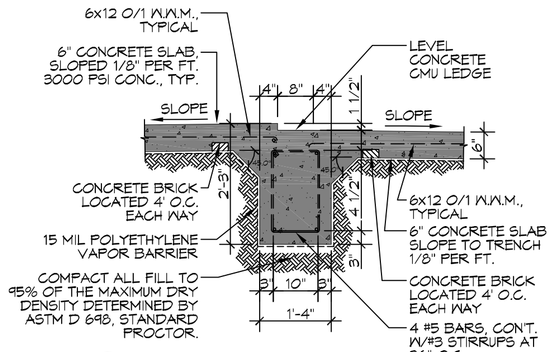

C S102|S101 SECTION
SCALE: 1/2" = 1'-0" AT INTERIOR WALL

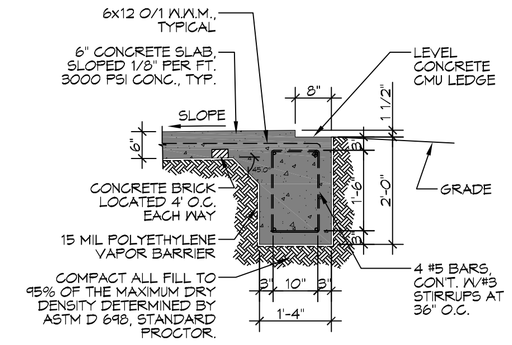

D S102|S101 SECTION
SCALE: 1/2" = 1'-0" AT EXTERIOR WALL

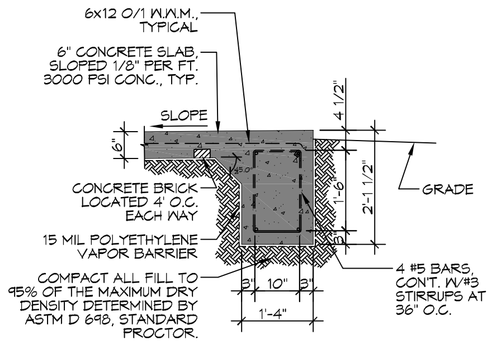

E S102|S101 SECTION
SCALE: 1/2" = 1'-0" AT ENTRY PORCH

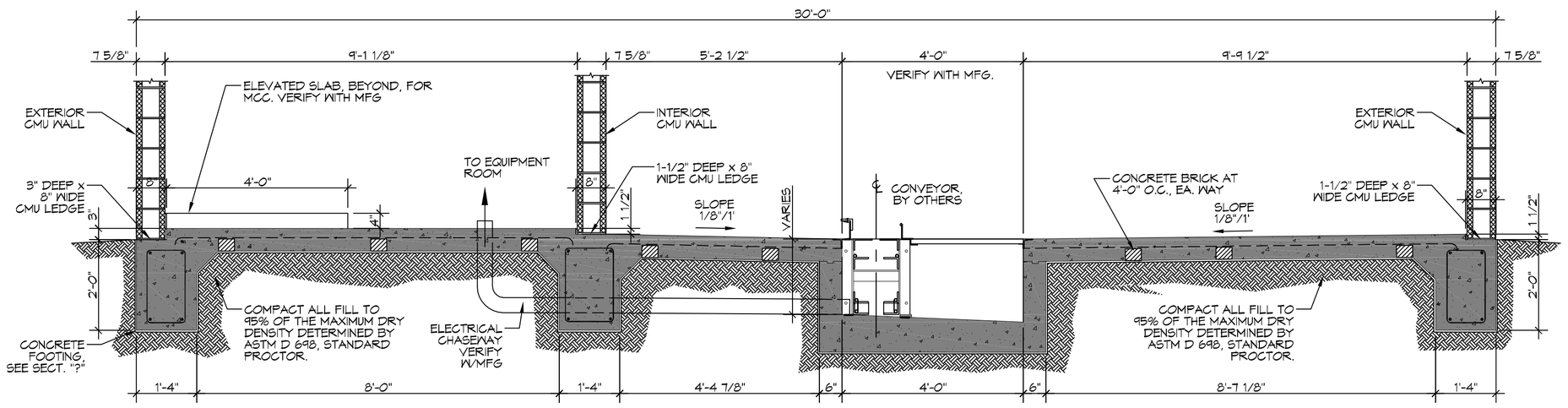

A S102|S101 SECTION
SCALE: 1/2" = 1'-0" SECTION THRU EQUIPMENT ROOM & TUNNEL @ SHALLOW

CMU LINTEL SCHEDULE			
WIDTH (W)	CLEAR SPAN	DEPTH (D)	HORZ. REINF.
8" TYP AT ALL CMU WALLS	UP TO 3'-4"	8"	(1) #6 BOTTOM
	UP TO 6'-4"	16"	(1) #6 THD
	UP TO 14'-0"	24"	(2) #6 THD

*PROVIDE 3000 PSI PEA-GRAVEL CONCRETE FILL FOR ALL LINTELS.

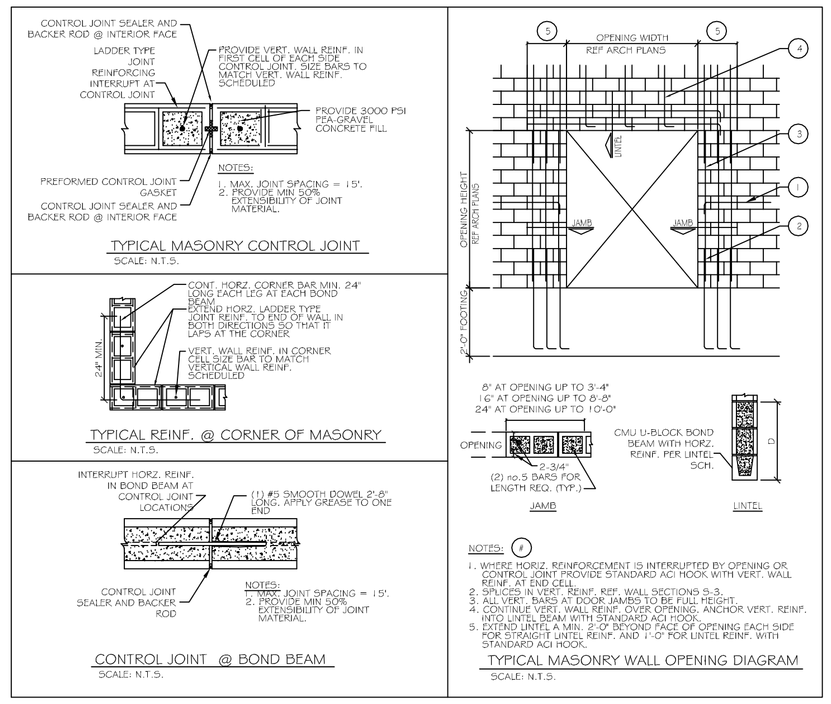

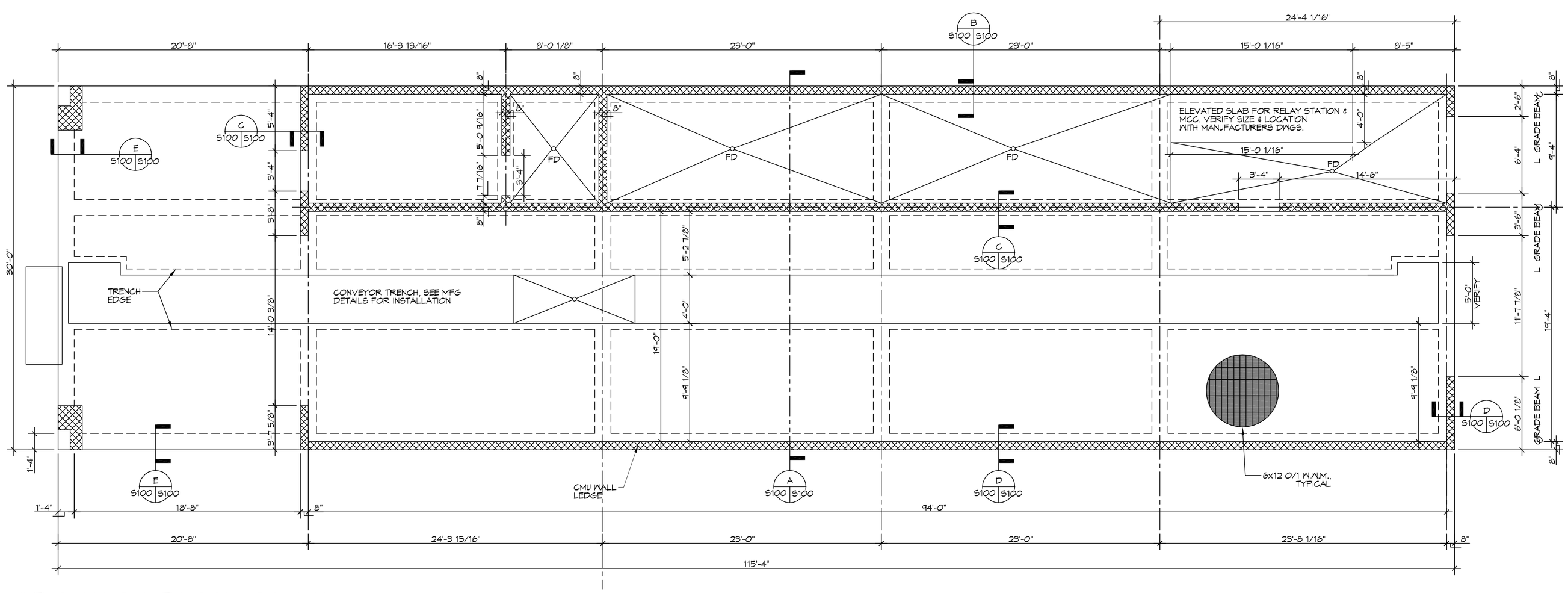

1 FOUNDATION PLAN
SCALE: 3/16"= 1'-0" CARWASH FOUNDATION PLAN

GENERAL FOUNDATION NOTES

1. THE CONCRETE MIX SHALL HAVE A MINIMUM COMPRESSIVE STRENGTH OF 3000 PSI AT 28 DAYS. CONCRETE MIX SHALL BE IN ACCORDANCE WITH ACI-318.
2. ALL CONVENTIONAL REINFORCING SHALL MEET ASTM-A615 (GRADE 60).
3. ONE LAYER OF POLYETHELENE VAPOR BARRIER SHALL BE PLACED UNDER ALL CONCRETE. VAPOR RETARDER TO BE 15 MIL STRENGTH; ASTM E1745 CLASS A, PERMEANCE LESS THAN 0.01 PERMS, EQUAL TO STEGO INDUSTRIES STEGO WRAP ECO-SHEILD-E 15 MIL. BY EPRO OR IRONBAR 15 BY FLATIRON FILMS. PROVIDE APPROPRIATE ACCESSORIES FOR A COMPLETE SYSTEM.
4. ALL REINFORCING STEEL AND MESH SHALL BE SECURELY SUPPORTED TO PREVENT BOTH VERTICAL AND HORIZONTAL MOVEMENT DURING CONCRETE PLACEMENT.
5. THE CONTRACTOR SHALL VERIFY ALL DROPS, OFFSETS, CMU LEDGES, DIMENSIONS, AND CONFIGURATIONS. CONTRACTOR MUST BE RESPONSIBLE FOR SAME.
6. GRADE BEAM SIZES MAY VARY BY -5% TO +20%.
7. ALL SUBGRADE FILL SHALL BE SELECT GRANULAR MATERIAL COMPACTED TO 95% STANDARD PROCTOR DENSITY IN A MAXIMUM OF 6" LIFTS.
8. A MINIMUM OF 6" CONCRETE THICKNESS SHALL BE MAINTAINED THROUGHOUT THE SLAB.
9. ALL RUNOFF WATER MUST BE CARRIED AWAY FROM THE SLAB TO PREVENT SATURATION OF THE SUB-BASE.
10. ALL TREES WITHIN CLOSE PROXIMITY SHALL BE REMOVED TO PREVENT THE ROOTS FROM EXTENDING UNDER THE SLAB.
11. PROVIDE AND MAINTAIN IMMEDIATE SITE DRAINAGE BEFORE, DURING, AND AFTER CONSTRUCTION. PROVIDE GRADING, SWELLS, AND SUMP PUMPS AS MAY BE REQUIRED TO IMMEDIATELY DRAIN ALL RAINWATER FROM THE CONSTRUCTION AREA. FOOTING EXCAVATIONS SHOULD BE OBSERVED AND CONCRETE TO BE PLACED AS QUICKLY AS POSSIBLE TO AVOID EXPOSURE OF THE FOOTING BOTTOMS TO WETTING AND DRYING. SURFACE RUNOFF WATER SHOULD BE DRAINED AWAY FROM THE EXCAVATIONS AND NOT BE ALLOWED TO POND PRIOR TO OR AFTER CONCRETE PLACEMENT. IF IT IS REQUIRED THAT A FOOTING EXCAVATION BE LEFT OPEN FOR MORE THAN ONE DAY, IT SHOULD BE PROTECTED TO REDUCE EVAPORATION OR ENTRY OF MOISTURE.
12. NEW SPREAD CONCRETE FOOTINGS AND CONTINUOUS FOOTINS, BEARING ON COMPACTED STRUCTURAL FILL, AT LEAST 2 FEET BELOW FINISHED GRADE, SHOULD BE DESIGNED FOR MAXIMUM NET ALLOWABLE BEARING PRESSURES OF 1,200 PSF AND 2,000 PSF RESPECTIVELY, BASED ON DEAD LOADS AND DESIGN LIVE LOADS.
13. BASED ON THE RESULTS OF THE FIELD AND LABORATORY TESTS, AND THE ANTICIPATED FOUNDATION LOADS, ESTIMATED MAXIMUM FOUNDATION SETTLEMENTS SHOULD NOT EXCEED 1-1/4". DIFFERENTIAL SETTLEMENT IS ESTIMATED TO BE LESS THAN 1 INCH.
14. TREAT SOIL BELOW SLAB FOR TERMITES.

SPECIAL FOUNDATION NOTES

1. HATCHED AREA ON PLAN INDICATES A CONTINUOUS 8" WIDE "RECESSED", LEVEL, TOP OF SLAB FOR THE CMU WALL'S BASE. ELEVATIONS AS SHOWN. BEGIN SLOPE OF THE CONCRETE SLAB TO THE TRENCH DRAIN OR FLOOR DRAINS BEYOND THE 8" LEVEL STRIP AS SHOWN ON PLAN. SAME SITUATION TO APPLY FOR THE CMU COLUMN LEDGE AT THE ENTRY PORCH, SEE PLAN.
2. LEVEL LANDING AT THE MECHANICAL ROOM DOOR. MAXIMUM ELEVATION TO BE 1/2" BELOW THE TOP OF SLAB.
3. GRID LINES ARE TO THE CENTERLINE OF GRADE BEAM FOOTING BELOW.
4. COORDINATE WITH EQUIPMENT MANUFACTURE/VENDOR'S DRAWINGS AND PROVIDE THE EQUIPMENT ELECTRICAL, CONDUIT, WIRING, AND PLUMBING REQUIREMENTS PRIOR TO COMMENCING ANY WORK.
5. VERIFY DIMENSIONS FOR ALL PIT, TRENCHES, DRAINS, AND ANY OTHER CONCRETE PENETRATIONS WITH THE EQUIPMENT VENDOR'S DRAWINGS, AS WELL, PRIOR TO COMMENCING ANY WORK.

DAMMON ENGINEERING, INC.
LOUISIANA & MISSISSIPPI
www.dammonengineering.com
info@dammonengineering.com
PH: 985.649.5832
Chief Engineer: Brian Mistich, PE
554 Old Spanish Trail
Slidell, LA 70458

#	DESCRIPTION	DATE
	REVISIONS	

SEAL:
BRIAN A. MISTICH
LICENSED PROFESSIONAL ENGINEER
20971
STATE OF MISSISSIPPI

CARWASH
CLARKS CARWASH
904 AZALEA DRIVE
PAHTRESSORD IVS, 39367

JOB No:	2326	DATE:	07/10/2017
DRAWN BY:	CKD	CHECKED BY:	CKD

The above drawing is an instrument of service, is the property of Dammon Engineering, and shall remain the property of Dammon Engineering. The reproduction, alteration, or publication of this drawing, in whole or in part, without the written permission of Dammon Engineering, is prohibited. Only those drawings bearing the original seal and signature of Dammon Engineering shall be considered valid.

SHEET TITLE:
FOUNDATION PLAN

DRAWING NUMBER:
S100

SHEET No: 4 of 8