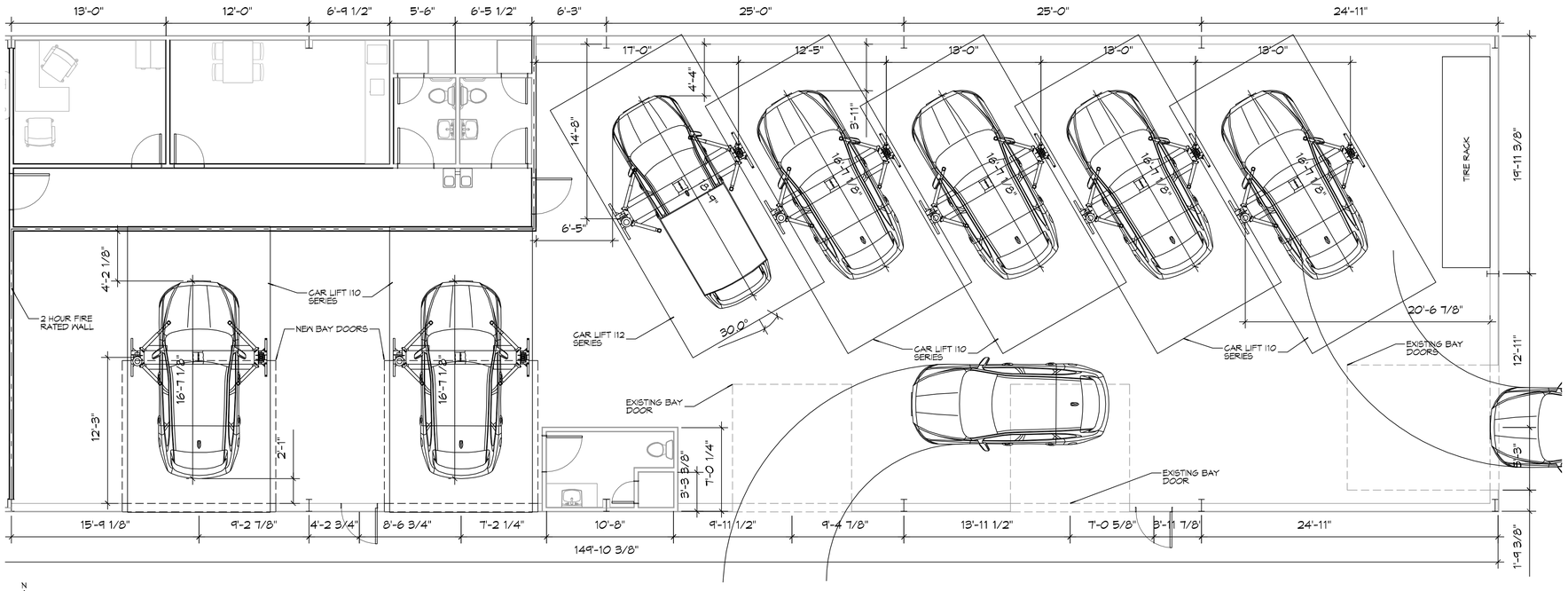

ROTARY LIFT LAYOUT

SCALE: 3/16"=1'-0"

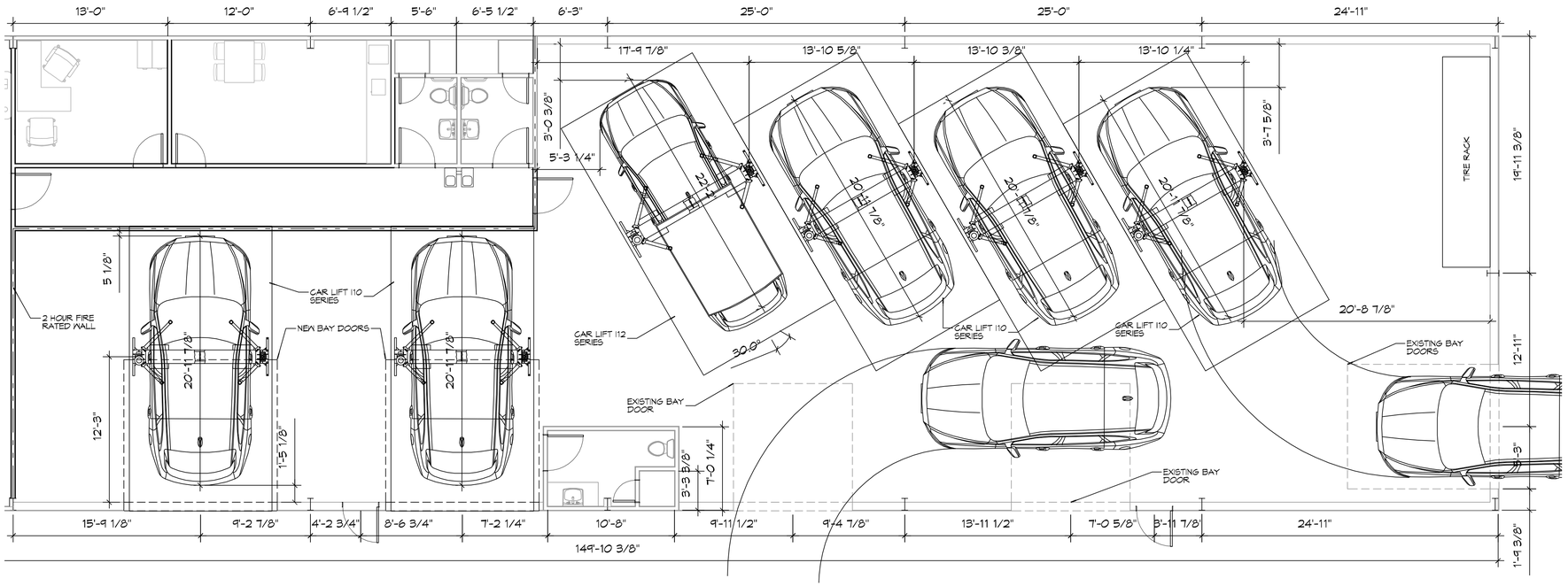

DAMMON ENGINEERING LAYOUT

SCALE: 3/16"=1'-0"

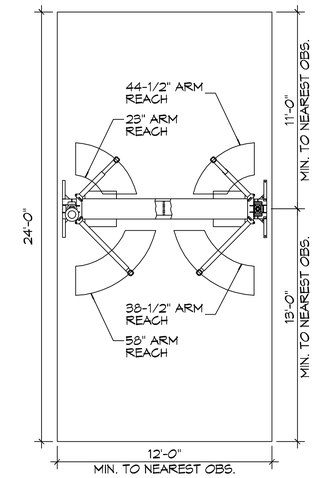

110 SERIES DETAIL

SCALE: 1/4"=1'-0"

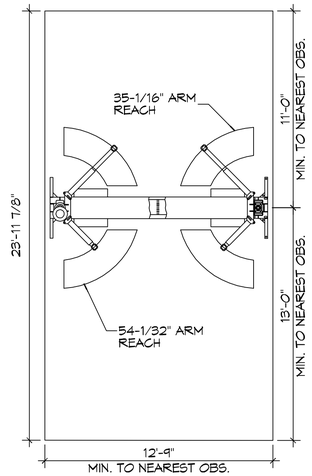

112 SERIES DETAIL

SCALE: 1/4"=1'-0"

DAMMON ENGINEERING, INC.
LOUISIANA & MISSISSIPPI
www.dammonengineering.com
info@dammonengineering.com
PH: 985.649.5832
Chief Engineer: Brian Mistich, PE
554 Old Spanish Trail
Slidell, LA 70458

#	DESCRIPTION	DATE

REVISIONS

SEAL:

MEINEKE

MEINEKE CAR CARE CENTER

722 EAST I-10 SERVICE ROAD
SLIDELL, LA.

JOB No:	23-47
DATE:	05/20/2021
DRAWN BY:	CKD
CHECKED BY:	CKD

The plans, drawings and specifications, designs and other expressed representations, thereon are and shall remain the property of Dammon Engineering, and shall not be used for other projects except those for which they were prepared, nor shall they be loaned, copied or reproduced in any form without the written consent of Dammon Engineering. Project owner, owner's engineer, architect and contractor are authorized to use and reproduce the plans, drawings and specifications, and construct the project.

SHEET TITLE:
FLOOR PLAN

DRAWING NUMBER:

A101

SHEET No: 3 of # 4