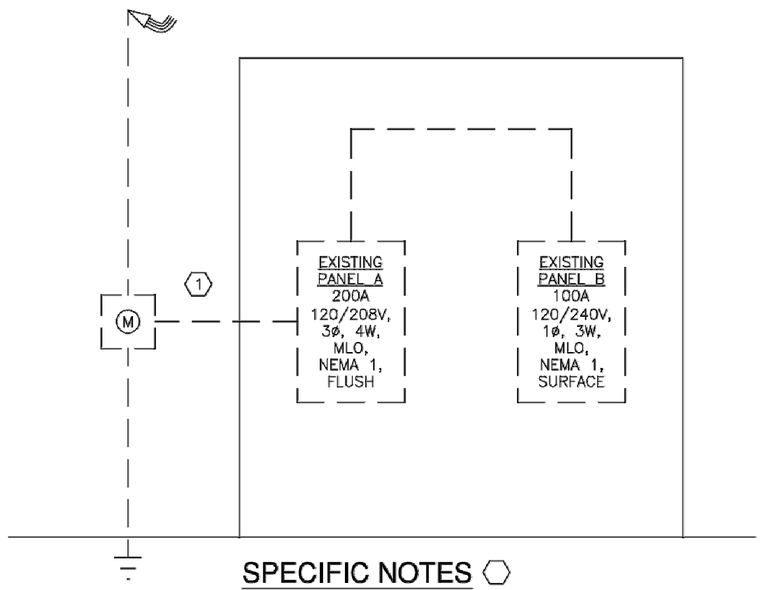

SPECIFIC NOTES ⬡

1. EXISTING ELECTRICAL SERVICE.

ELECTRICAL ONELINE DIAGRAM

NOT TO SCALE

DIRECTORY	CKT. NO.	BKR. AMPS	L1	L2	BKR. AMPS	CKT. NO.	DIRECTORY
AHU	1	60			20	2	LIGHTS
	3				20	4	LIGHTS
CU	5	40			20	6	LIGHTS
	7				20	8	LIGHTS
CUSTOMER WORK STATION	9	20			20	10	POINT OF SALE
LOBBY	11	20			20	12	POINT OF SALE
OFFICE	13	20			20	14	MEINEKE WALL
RESTROOMS	15	20			20	16	HOSPITALITY STATION
SHOP RESTROOM	17	20			20	18	SPARE
EWH	19	30			20	20	SPARE
	21				20	22	SPARE
SHOP SUBPANEL B	23	100			20	24	SPARE
	25				20	26	SPARE
SPARE	27	20			20	28	SPARE
SPARE	29	20			20	30	SPARE

VOLTAGE: 120/240V 1 PHASE 3 WIRE SN 10KAIC	PANEL NO.	A
MAIN BREAKER: 200A, MCB		
MOUNTING: FLUSH, NEMA 1	LOCATION	SEE PLANS
NOTE: EXISTING PANEL		

DIRECTORY	CKT. NO.	BKR. AMPS	L1	L2	BKR. AMPS	CKT. NO.	DIRECTORY
ALIGNMENT	1	20			20	2	AIR
	3					4	
LIFT	5	20			20	6	LIFT
	7					8	
LIFT	9	20			20	10	BAY 1
	11				20	12	BAY 2
LIFT	13	20			20	14	BAY 3
	15				20	16	BAY 4
LIFT	17	20			20	18	BAY 5
	19				20	20	GFI RECEPTACLES

VOLTAGE: 120/240V 1 PHASE 3 WIRE SN 10KAIC	PANEL NO.	B
MAIN BREAKER: 100A, MLO		
MOUNTING: SURFACE, NEMA 1	LOCATION	SEE PLANS
NOTE: EXISTING PANEL		

SPECIFICATIONS

1. THIS DOCUMENT HAS BEEN PREPARED BY ME AND/OR UNDER MY SUPERVISION AND IT COMPLIES, TO THE BEST OF MY KNOWLEDGE AND BELIEF, WITH LOCAL AND STATE CODE REQUIREMENTS.
2. ELECTRICAL WORK SHALL BE IN ACCORDANCE WITH THE NATIONAL ELECTRICAL CODE (NEC 2014 EDITION), STATE AND CITY REGULATIONS AND ORDINANCES.
3. ALL ELECTRICAL SYSTEMS, EQUIPMENT, AND COMPONENTS SHALL BE LOCATED AT OR ABOVE THE BASE FLOOD ELEVATION OR GRADE ELEVATION, WHICHEVER IS HIGHER, AS PER INTERNATIONAL 2012 ARTICLE 1612.1.
4. SHORT CIRCUIT CURRENT INTERRUPTING RATINGS OF ALL CIRCUIT BREAKERS AND FUSES SHALL COMPLY WITH NEC 2014 ARTICLES 110.9, 110.10, 225.52(B), 230.82(3), 230.205(B), 230.208, 240.12, AND 240.92(C)(1).
5. MATERIALS SHALL BE NEW AND U.L. APPROVED, EXCEPT AS INDICATED.
6. CONTRACTOR SHALL APPLY FOR PERMITS AND PAY INSPECTION FEES. NO WORK SHALL BE CONCEALED UNTIL APPROVED BY LOCAL INSPECTOR. UPON COMPLETION, FURNISH CERTIFICATE OF APPROVAL FROM DIVISION OF REGULATORY INSPECTION AS APPLICABLE.
7. CONDUCTORS SHALL BE COPPER WITH TYPE THHN/THWN INSULATION, AND SHALL BE #12 AWG OR LARGER.
8. WIRING CONCEALED IN WALLS, ATTICS, OR CRAWL SPACES SHALL BE METAL CLAD CABLE.
9. WIRING INSTALLED OUTDOORS SHALL BE CONTAINED IN RIGID PVC CONDUIT, UNLESS INDICATED OTHERWISE; PROVIDE SCHEDULE 80 ABOVE GROUND.
10. WIRING INSTALLED EXPOSED IN DRY LOCATIONS SHALL BE CONTAINED IN ELECTRIC METALLIC TUBING WITH SET SCREW FITTINGS, UNLESS INDICATED OTHERWISE.
11. RACEWAYS AND CABLES SHALL BE CONCEALED UNLESS INDICATED OTHERWISE.
12. EACH BRANCH CIRCUIT AND FEEDER SHALL BE PROVIDED WITH A GROUND CONDUCTOR INSTALLED WITH THE CIRCUIT CONDUCTORS. EACH GROUND CONDUCTOR SHALL BE A GREEN INSULATED COPPER CONDUCTOR , SIZED IN ACCORDANCE WITH TABLE 250.122 OF THE NATIONAL ELECTRICAL CODE NFPA 70. THESE GROUNDING CONDUCTORS ARE NOT SHOWN ON THE DRAWINGS.
13. AFTER COMPLETION OF BRANCH CIRCUIT WORK, NEW CORRECTED TYPEWRITTEN DIRECTORIES SHALL BE PROVIDED IN PANELBOARDS AND LOADCENTERS SERVING THE AREA. NEW TYPEWRITTEN DIRECTORIES SHALL ALSO BE PROVIDED FOR EXISTING ELECTRICAL PANELS.
14. WALL TOGGLE SWITCHES SHALL BE MOUNTED TO HEIGHTS AS DIRECTED BY ARCHITECT. STYLE (STANDARD TOGGLE OR DECORA) AND COLOR (WHITE, IVORY, OR LIGHT ALMOND) SHALL BE AS DIRECTED BY ARCHITECT OR OWNER.
15. ELECTRICAL CONTRACTOR SHALL INSTALL POWER WIRING REQUIRED FOR MECHANICAL SYSTEMS. CONTROL WIRING SHALL BE BY MECHANICAL CONTRACTOR.
16. SEQUENCE, COORDINATE, AND INTEGRATE INSTALLING ELECTRICAL MATERIALS AND EQUIPMENT FOR EFFICIENT FLOW OF THE WORK. COORDINATE ELECTRICAL EQUIPMENT AND DEVICES WITH OTHER BUILDING COMPONENTS.
17. COORDINATE CONNECTING ELECTRICAL SYSTEMS WITH EXTERIOR UNDERGROUND AND OVERHEAD UTILITIES AND SERVICES. COMPLY WITH REQUIREMENTS OF GOVERNING REGULATIONS, FRANCHISED SERVICE COMPANIES, AND CONTROLLING AGENCIES.
18. COORDINATE REQUIRED NUMBER OF CONDUITS, SIZE OF CONDUITS, AND PULL BOX REQUIREMENTS WITH UTILITIES.
19. PROVIDE BONDING AROUND CONCENTRIC AND ECCENTRIC KNOCKOUTS ON EQUIPMENT.
20. PROVIDE ADDITIONAL BOXES IN RACEWAYS AS NECESSARY. LOCATIONS SHALL MEET NFPA 70.

SYMBOL SCHEDULE

- LED FIXTURE, RECESSED.
- SURFACE MOUNTED LINEAR, LED..
- LAY-IN RECESSED, LED LUMINAIRE.
- EXTERIOR GOOSENECK FIXTURE WITH LED LAMP.
- EXTERIOR WALL MOUNTED LUMINAIRE.
- EXTERIOR FLOOD.
- EXHAUST FAN, FURNISHED BY DIV 25.
- EXIT LIGHT.
- TWIN HEAD EMERGENCY BATTERY FIXTURE.
- COMBINATION EXIT AND TWIN HEAD EMERGENCY BATTERY FIXTURE.
- EXTERIOR REMOTE HEAD.
- S — 20A/1P WALL SWITCH.
- S_3 — 20A THREE-WAY WALL.
- 20A, 3-WIRE, 125V, GROUNDING TYPE DUPLEX RECEPTACLE, NEMA 5-20R.
- SAME AS — EXCEPT MOUNTED ABOVE COUNTER AT HEIGHT AS DIRECTED.
- SAME AS — EXCEPT HALF OF YOKE IS SWITCHED.
- GFI — SAME AS — EXCEPT WITH GROUND FAULT INTERRUPTER.
- WP — SAME AS GFI — EXCEPT WEATHERPROOF.
- EWC — SAME AS GFI — EXCEPTMOUNTED AS REQUIRED FOR ELECTRIC WATER COOLER.
- FLOOR RECEPTACLE, METAL, BRUSHED NICKEL PLATE.
- J — JUNCTION BOX 4-11/16" SQUARE OR LESS, LOCATED ABOVE ACCESSIBLE CEILING.
- J — SAME AS J EXCEPT PROVIDE WIRING IN RACEWAY TO EACH LIGHTING FIXTURE IN THIS ROOM USING OTHER OUTLET BOXES AS SPECIFIED.
- JUNCTION BOX OR WIREWAY, LARGER THAN 4-11/16".
- LOADCENTER OR PANELBOARD.
- LC — LIGHTING CONTACTOR, 4-POLE, 30A.
- TC — TIME CLOCK.
- PE — PHOTOELECTRIC SWITCH.
- DATA/TELEPHONE OUTLET. NUMERAL INDICATES THE NUMBER OF CAT5 DROPS TO LOCATION; PROVIDE CAT 5 TO TELEPHONE DEMARCATION.
- TV — TV LOCATION, PROVIDE COAX CABLE TO CATV DEMARCATION.
- SAFETY SWITCH.
- WIRING IN RACEWAY CONCEALED OVERHEAD OR IN WALLS. CROSSBARS INDICATE NUMBER OF CONDUCTORS IF MORE THAN TWO. REQUIRED GREEN EQUIPMENT GROUNDING CONDUCTOR IS NOT SHOWN AS A CROSSBAR. ARROWS INDICATE NUMBER OF CIRCUITS.

FIXTURE SCHEDULE

- F1 2X4 LAY-IN TROFFER, LED.
- F2 EXISTING EXTERIOR DECORATIVE.
- F3 EXISTING WALLPACK.
- F4 6" RECESSED LED.
- F5 8' LED STRIP.
- F6 MILLENIUM RAS10, GOOSENECK FIXTURE WITH CUSTOM PANTONE 109U PAINT.
- EX DOUBLE FACED, ILLUMINATED EXIT SIGN.
- EMX LITHONIA, LHQM-LED-R-HO, COMBINATION EMERGENCY EXIT AND DUEL HEAD EMERGENCY WITH WHITE THERMOPLASTIC HOUSING, RED LETTERS AND 90-MINUTE BATTERY BACKUP.
- EM LITHONIA, ELM2-LED, DUEL HEAD EMERGENCY WITH WHITE THERMOPLASTIC HOUSING AND 90-MINUTE BATTERY BACKUP.
- EMR LITHONIA, ELA-LED-WP-M12, SINGLE-HEAD WEATHER-PROOF REMOTE EMERGENCY FIXTURE FED FROM INTERIOR EMX FIXTURE WITH HIGH-OUTPUT BATTERY.

NEW ORLEANS LOUISIANA PROFESSIONAL ENGINEERS
nola engineering
License No. 3296
504.326.9158

DAMMON ENGINEERING, INC.
LOUISIANA & MISSISSIPPI
www.dammonengineering.com
info@dammonengineering.com
PH: 985.649.5832
Chief Engineer: Brian Mistich, PE
554 Old Spanish Trail
Slidell, LA 70458

REVISIONS

#	DESCRIPTION	DATE

SEAL:

STATE OF LOUISIANA
RICKEY JOHN KASTNER, JR
License No. 37664
PROFESSIONAL ENGINEER
06/16/2021

MEINEKE CAR CARE CENTER
722 EAST I-10 SERVICE ROAD
SLIDELL, LA 70460

JOB No:	2442	DATE:	06/17/2021
DRAWN BY:	RJK	CHECKED BY:	RJK

This plans & drawings, plus specifications, design data, drawings prepared, representative, diagrams and data remain the property of Dammon Engineering, and project owner shall be granted a non-exclusive license to use for the purpose of constructing, occupying and maintaining the project. Reproduction, publication or use by others except as required for construction of the project is prohibited. Title to plans & drawings & specifications remain with Dammon Engineering. Reuse in part or whole without written permission of Dammon Engineering is prohibited.

SHEET TITLE:
ELECTRICAL ONE LINE DIAGRAM

DRAWING NUMBER:
E101

SHEET No: 7 of # 8