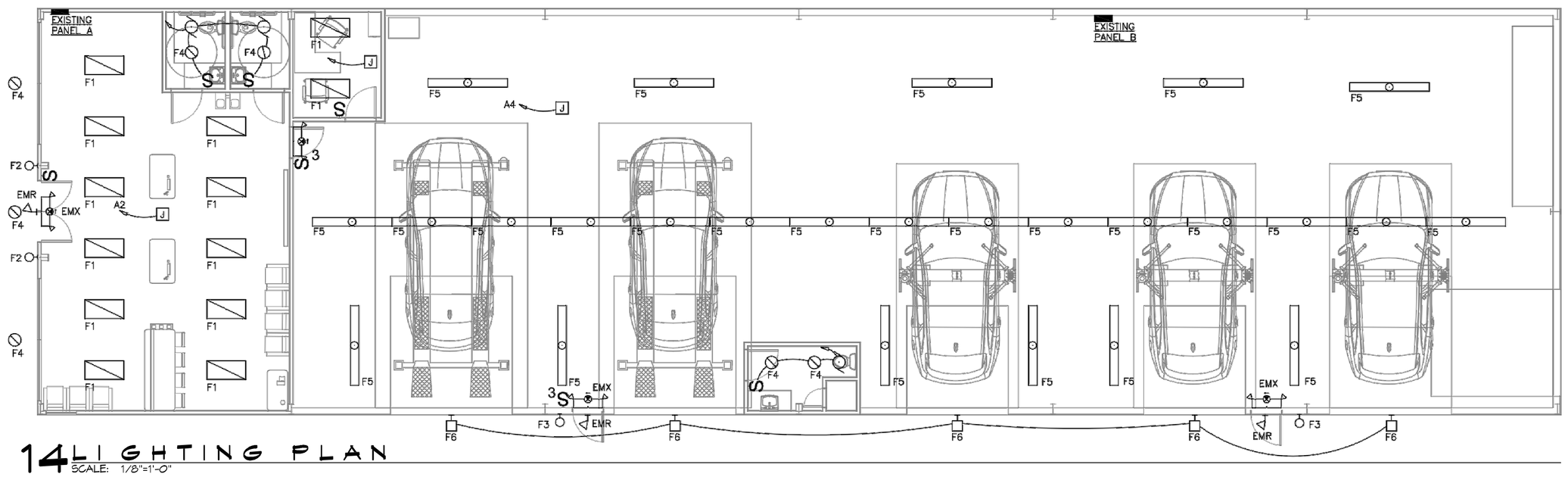

14 LIGHTING PLAN
SCALE: 1/8"=1'-0"

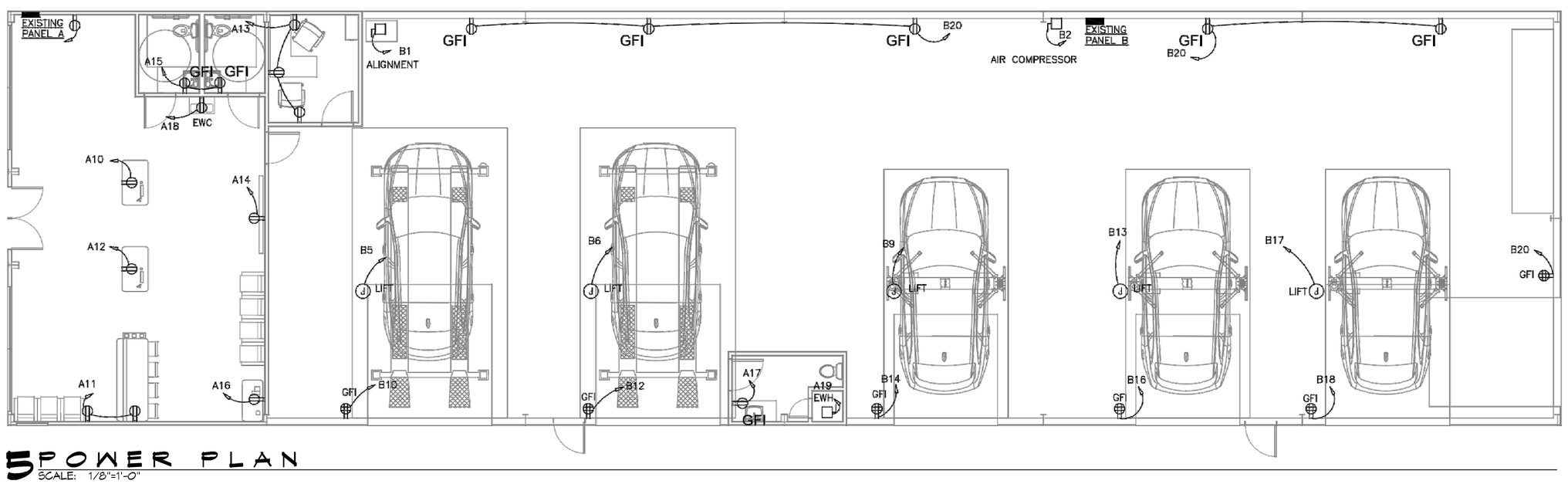

15 POWER PLAN
SCALE: 1/8"=1'-0"

NOTES

1. THIS DOCUMENT HAS BEEN PREPARED BY ME AND/OR UNDER MY SUPERVISION AND IT COMPLIES, TO THE BEST OF MY KNOWLEDGE AND BELIEF, WITH LOCAL AND STATE CODE REQUIREMENTS.
2. ALL ELECTRICAL EQUIPMENT SHALL BE INSTALLED AS PER NATIONAL ELECTRICAL CODE NFPA 70 AND BE U.L. LISTED.

NEW ORLEANS LOUISIANA
nola engineering
License No. 5296
504.326.9158
PROFESSIONAL ENGINEER

DAMMON ENGINEERING, INC.
LOUISIANA & MISSISSIPPI
www.dammonengineering.com
info@dammonengineering.com
PH: 985.649.5832
Chief Engineer: Brian Mistich, PE
554 Old Spanish Trail
Slidell, LA 70458

#	DESCRIPTION	DATE

REVISIONS

SEAL:
STATE OF LOUISIANA
RICKEY JOHN KASTNER JR
License No. 37654
PROFESSIONAL ENGINEER
06/16/2021

MEINEKE
MEINEKE CAR CARE CENTER
722 EAST I-10 SERVICE ROAD
SLIDELL, LA 70458

JOB No:	2442
DATE:	06/17/2021
DRAWN BY:	RJK
CHECKED BY:	RJK

The plans and/or specifications, including data, drawings and other representations, illustrations and models remain the property of Dammon Engineering, and are not to be used on other projects or for other purposes than those specifically intended by Dammon Engineering. Reproduction or publication of these plans and specifications, in whole or in part, is prohibited without the written consent of Dammon Engineering. Reuse of these plans and specifications by anyone other than Dammon Engineering, for any purpose, is prohibited.

SHEET TITLE:
POWER AND LIGHTING PLAN

DRAWING NUMBER:
E102

SHEET No: 8 of # 8

FILE NAME: J:\ - Commercial\2442 - Meineke Revolution Slidell Service BID\Drawings\Current Drawings\E102 - Power and Lighting plan.dwg PLOT DATE & TIME: Thursday, June 17, 2021 8:33:14 AM