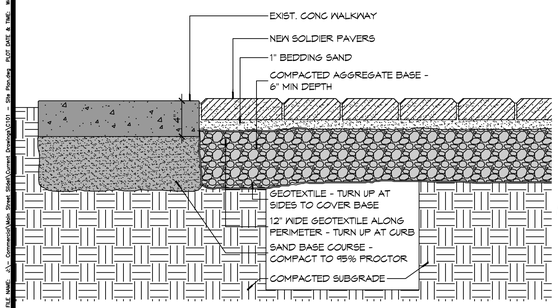

2 WALKWAY DETAIL
SCALE: 1 1/2"=1'

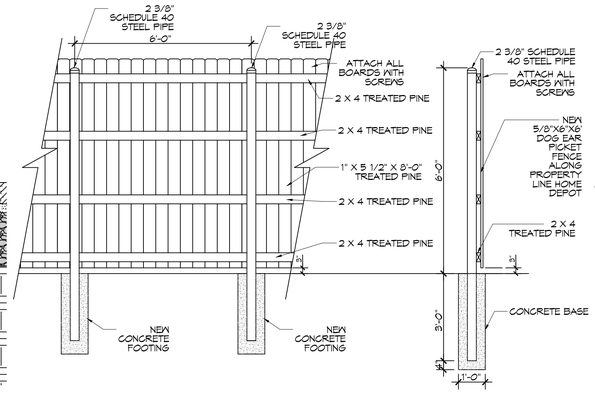

3 SIX FOOT FENCE DETAIL
SCALE: 3/8" = 1'-0"

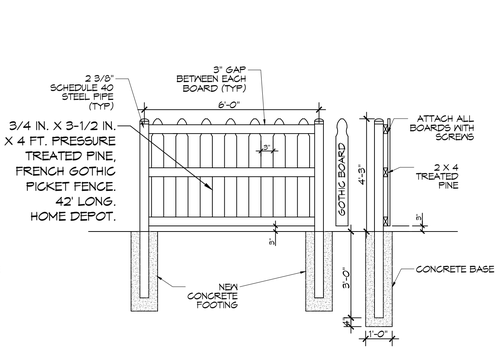

4 FOUR FOOT FENCE DETAIL
SCALE: 3/8" = 1'-0"

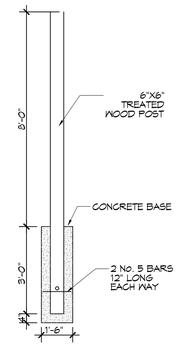

5 LIGHT POLE
SCALE: 3/8" = 1'-0"

GENERAL NOTES

1. SIDEWALK RADII DIMENSIONS ARE TO SIDEWALK CENTERLINE UNLESS NOTED OTHERWISE.
2. CENTER POINT FOR RADII ARE IDENTIFIED AS WORKPOINT (WP).
3. MAXIMUM SIDEWALK INCLINE SHALL NOT EXCEED 5%.
4. WHERE CROSS SLOPE OCCURS, SLOPE SHALL NOT EXCEED 5% AND SLOPE IN THE DIRECTION OF ROBERT STREET.
5. SLOPE PROFILE OF NEW SIDEWALK SHALL CONFORM TO EXIST ADJACENT GRADE ELEVATIONS AT ENDS OF FORMS PROVIDED THAT SLOPE CONFORMS TO NOTE 3.
6. CONTRACTOR SHALL FIELD VERIFY EXISTING LANDMARKS, LOCATIONS, CONDITIONS PRIOR TO CONSTRUCTION AND NOTIFY ARCHITECT WHERE ANY DISCREPANCIES WITH CONSTRUCTION OCCUR.
7. ALL DIMENSIONS ARE ±.

BRICK COUNT

4"X8" ENGRAVED TILE BRICKS - 2,804 ±

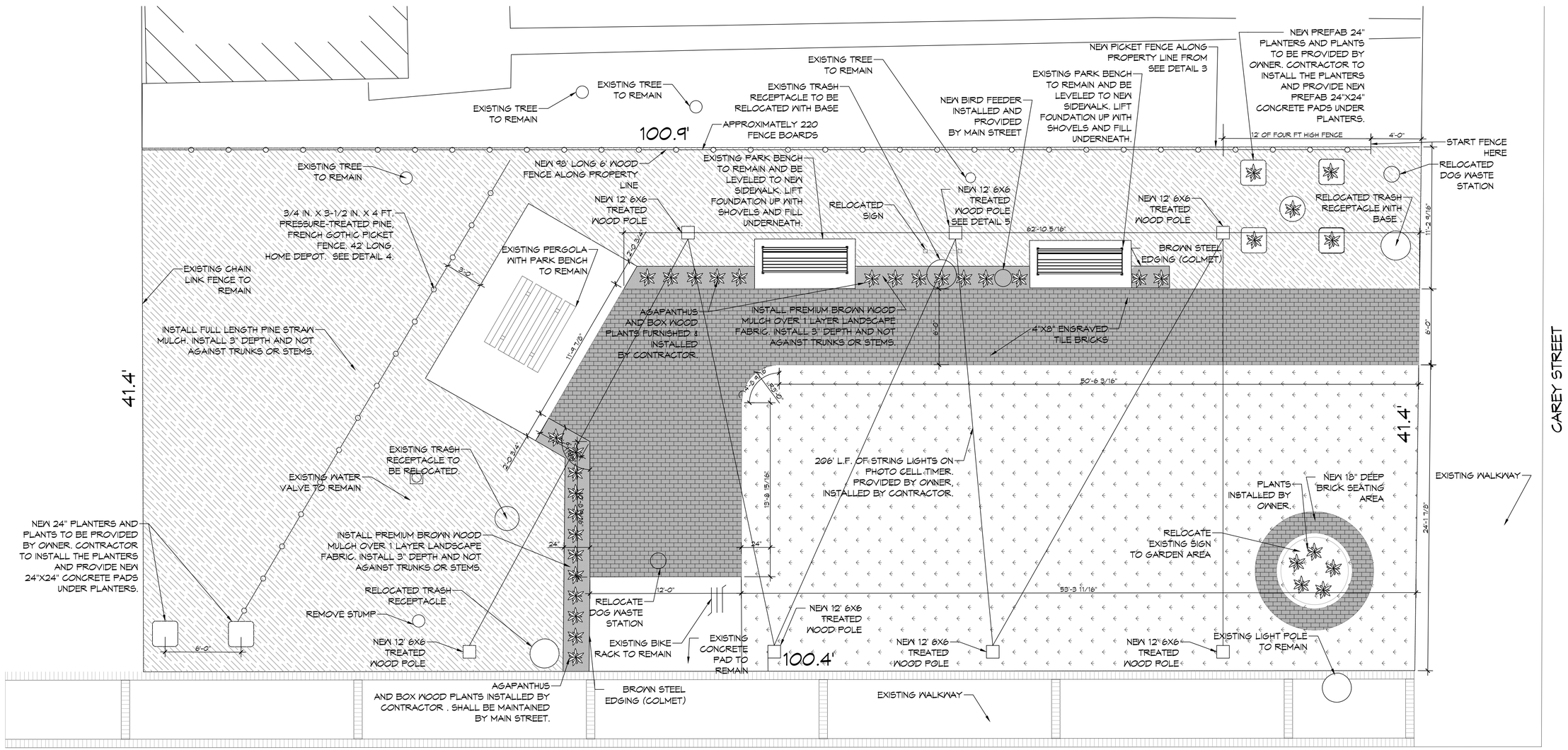

1 SITE PLAN
SCALE: 1/4"=1'-0"

DAMMON ENGINEERING, INC.
LOUISIANA & MISSISSIPPI
www.dammoneng.com
info@dammoneng.com
PH: 985.649.5832
Chief Engineer: Brian Mistich, PE
5544 Crown Trail
Slidell, LA 70458

#	DESCRIPTION	DATE

REVISIONS

SEAL:

PARK IMPROVEMENT

MAIN STREET SLIDELL

2302 CAREY ST.
SLIDELL, LA. 70458

JOB No: 2024 | DATE: 07-31-2024
DRAWN BY: CAD | CHECKED BY: CAD

THIS DOCUMENT IS THE PROPERTY OF DAMMON ENGINEERING, INC. AND MUST BE RETURNED UPON REQUEST. ALL REPRODUCTIONS, COPIES OR USES OF THIS DOCUMENT IN WHOLE OR IN PART WITHOUT THE WRITTEN CONSENT OF DAMMON ENGINEERING, INC. ARE PROHIBITED. ANY IDEAS, DESIGNS, DRAWINGS, OR OTHER INFORMATION CONTAINED IN THIS DOCUMENT FURNISHED FOR WHICH THE FEE HAS NOT BEEN PAID WILL BE CONSIDERED AS AN INSTRUMENT OF SERVICE.

SHEET TITLE:
PARK IMPROVEMENTS

DRAWING NUMBER:

C100

SHEET No: 1 of 1