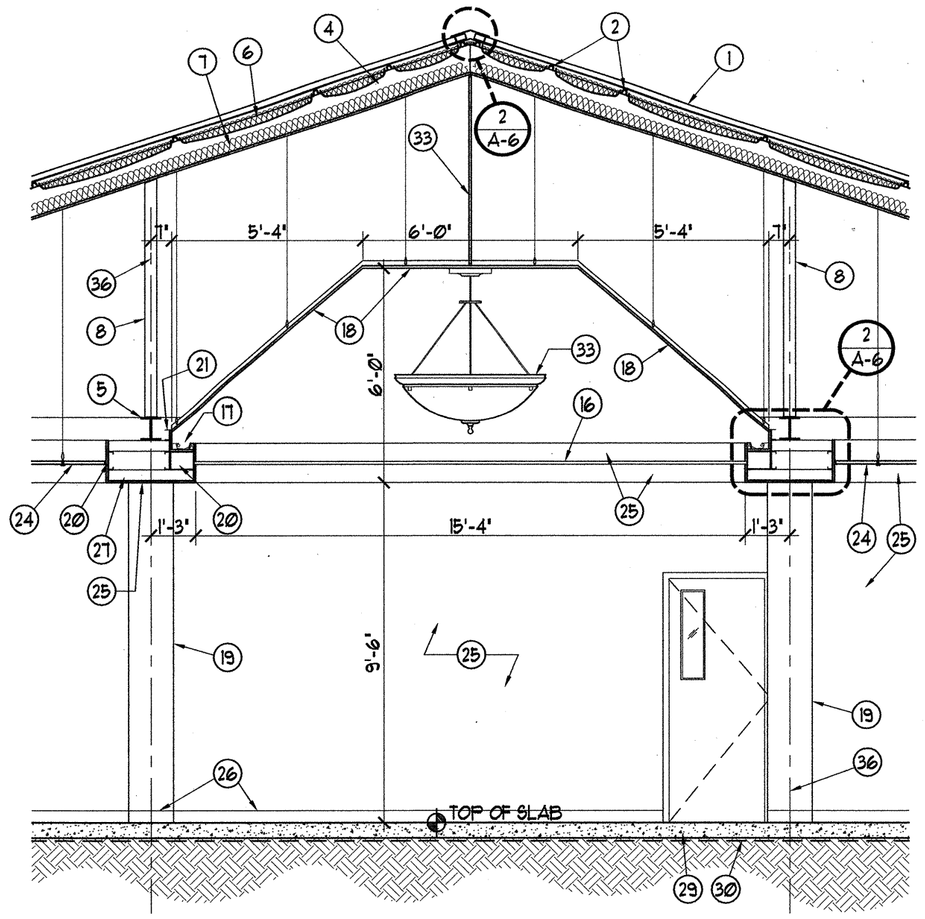

1 A-9 BUILDING SECTION
SCALE: 1/4" = 1'-0"

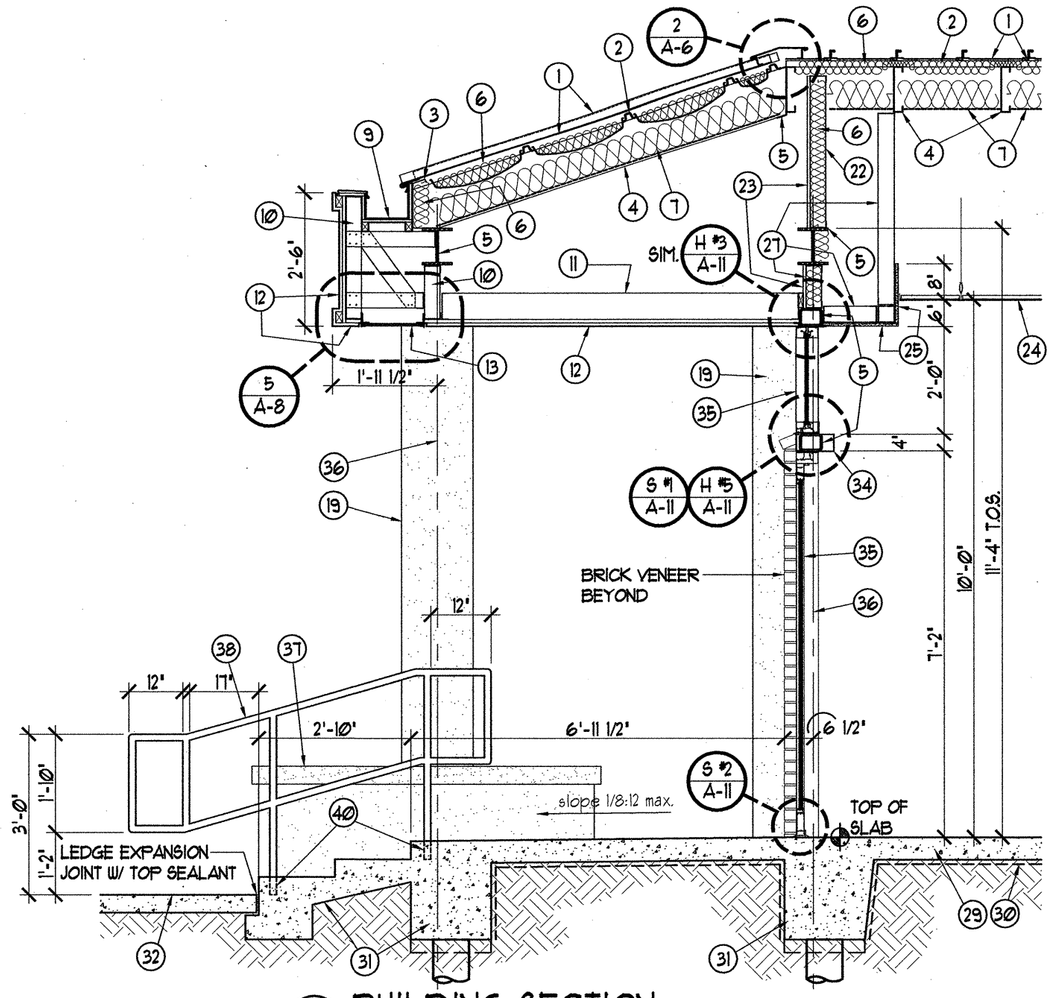

5 A-9 BUILDING SECTION
SCALE: 3/8" = 1'-0"

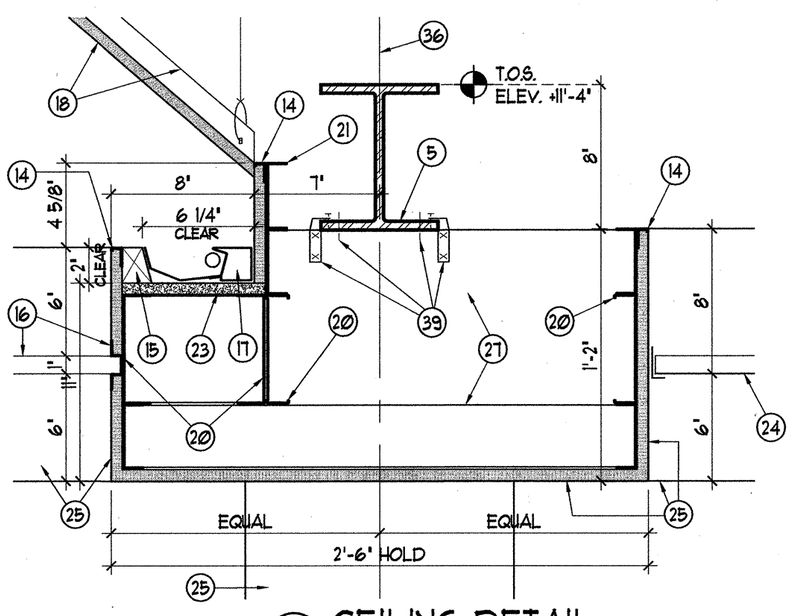

3 A-9 CEILING DETAIL
SCALE: 1-1/2" = 1'-0"

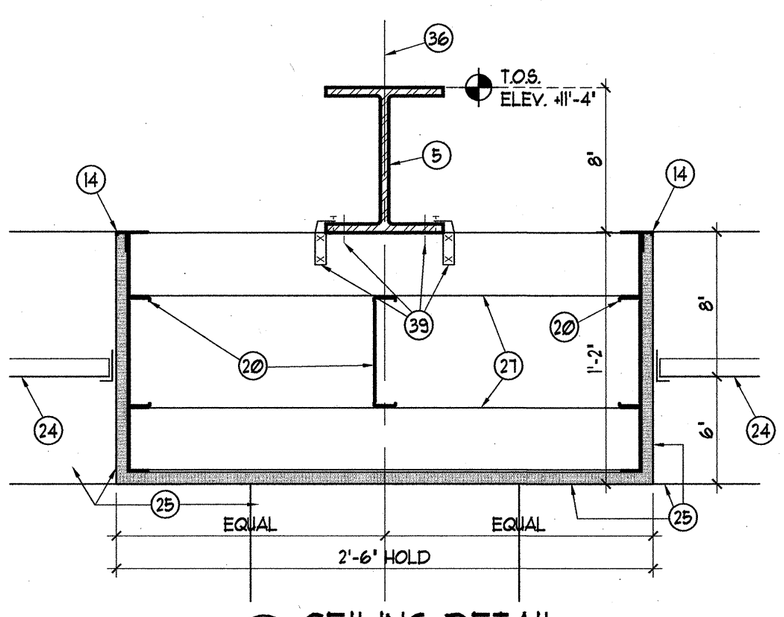

4 A-9 CEILING DETAIL
SCALE: 1-1/2" = 1'-0"

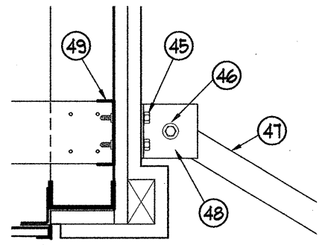

6 A-9 CANOPY DETAIL
SCALE: 1-1/2" = 1'-0"

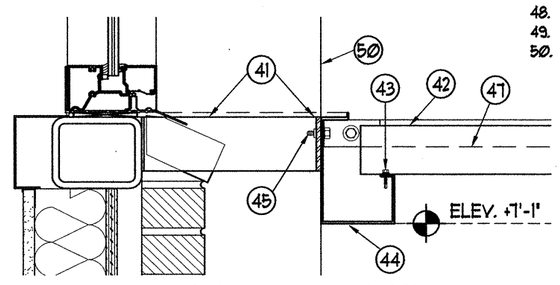

7 A-9 CANOPY DETAIL
SCALE: 1-1/2" = 1'-0"

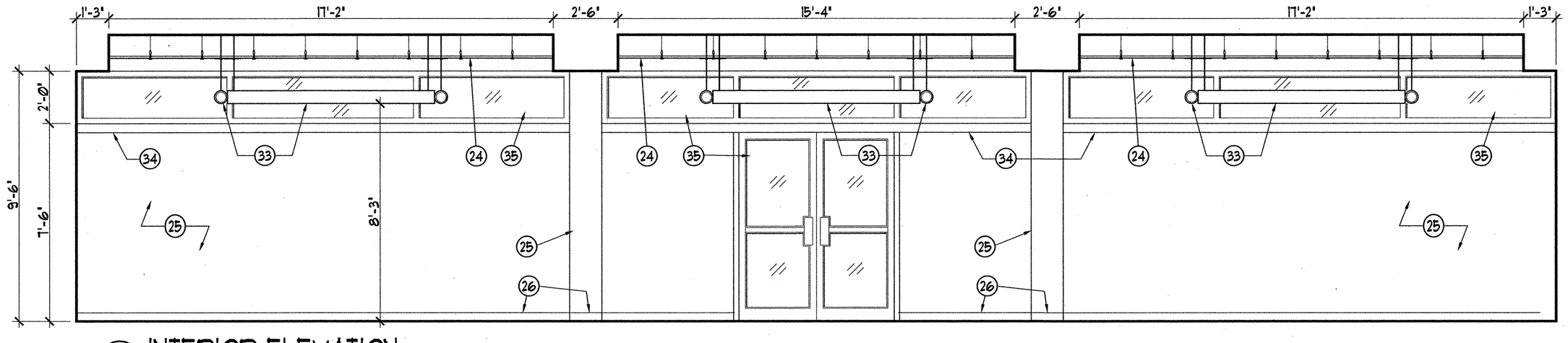

2 A-9 INTERIOR ELEVATION
SCALE: 1/4" = 1'-0"

KEY NOTES:

1. STANDING SEAM METAL ROOF PANEL SECURED TO CONTINUOUS RIB.
2. 1 ½" (16 GA) HAT CHANNELS.
3. CONTINUOUS (16 GA) EAVE STRUT.
4. 2"x 10" STRUCTURAL STUD RAFTERS AT 24" O.C., SEE STRUCTURAL DRAWINGS.
5. METAL STRUCTURE MEMBER, SEE STRUCTURAL DRAWINGS.
6. 3½" VINYL FACED BATT INSULATION.
7. WIRE SUPPORTED 6" UNFACED BATT INSULATION BETWEEN ROOF RAFTERS.
8. 4' (18 GA) KNEE WALL PER STRUCTURAL.
9. FORMED ONE PIECE 24 GA TYPE 304 STAINLESS STEEL GUTTER, SEE SHEET A-5.
10. 3⅝" (16 GA) STUD FRAMING AT 16" O.C.
11. 6" (16 GA) STUD FRAMING AT 16" O.C.
12. PAINTED ¾" PLASTER ON SELF-FURRING MTL. LATH OVER STUCCO WRAP ON ¾" EXTERIOR GRADE CDX PLYWOOD.
13. PREFINISHED METAL SOFFIT PANEL, SEE CEILING PLAN FOR LAYOUT.
14. GYPSUM BOARD "J" TRIM.
15. PT. WOOD BLOCKING AS REQUIRED.
16. GYPSUM BOARD REVEAL MOLDING.
17. COVE LIGHT FIXTURE, SEE ELECTRICAL DWGS.
18. PAINTED ⅝" GYPSUM BOARD ON SUSPENDED DRY WALL GRID SYSTEM.
19. PAINTED PLASTER COLUMN, SEE A-13.
20. 6" (18 GA) CONTINUOUS STUD.
21. 3⅝" (18 GA) CONTINUOUS STUD.
22. 3⅝" (20 GA) METAL STUDS AT 16" O.C. UP TO ROOF ASSEMBLY.
23. ⅝" EXTERIOR SHEATHING.
24. LAY-IN ACOUSTICAL CEILING SYSTEM.
25. PAINTED ⅝" GYPSUM BOARD.
26. 4" CARPET BASE.
27. 3⅝" (18 GA) STUDS AT 16" O.C.-TYP.
28. 6" (18 GA) STUDS AT 16" O.C.-TYP.
29. CONCRETE SLAB PER STRUCTURAL.
30. VAPOR BARRIER.
31. SEE FOUNDATION DETAILS FOR FOOTING SIZES AND REINFORCING.
32. SEE SITE PAVING PLAN.
33. LIGHT FIXTURES, SEE CEILING PLAN AND ELECTRICAL DRAWINGS. SUPPORT FROM STRUCTURE.
34. 4" HIGH CONTINUOUS ALUMINUM WALL TRIM.
35. EXTERIOR ALUMINUM STOREFRONT SYSTEM, ANCHOR TO PERIMETER STRUCTURE AS REQUIRED TO MEET SPECIFIED PERFORMANCE REQUIREMENTS.
36. COLUMN LINE.
37. BUILT-IN PLANTER: ¾" PAINTED PLASTER ON 8" C.M.U.,
38. PAINTED 1-1/2" STEEL HANDRAIL WITH ADA EXTENSIONS.
39. ATTACH EACH STUD TO STEEL BEAM, MIN. 2 FASTENERS PER STUD, OF SUFFICIENT TYPE & SIZE TO FULLY SUPPORT DEAD LOAD OF THE FINISHED GYPSUM BOARD AND FRAMING. INSTALL 18 GA METAL STRAPS TO BEAM AS NECESSARY.
40. GROUT RAIL POSTS INTO 4" DEEP BLOCKOUTS IN CONCRETE.
41. 3" WIDE x 1/4" THK. x ±10" LONG STEEL "L" PLATE BRACKET WELDED TO STEEL TUBE TO ANCHOR ALUMINUM CANOPY TO BUILDING STRUCTURE. SET AT ROWLOCK JOINT. PROVIDE ALUMINUM CLOSURE FLASHING AT DOORS (SAME WIDTH AS DOOR).
42. ALUMINUM ROOF DECKING (1 1/2" DECK).
43. #10 x 1" NEOPRENE WASHER TEK SCREW TO SECURE DECK TO GUTTER/ BEAM.
44. CONTINUOUS 4" x 6" GUTTER/ BEAM (CUSTOM DEPTH). AT PERIMETER.
45. 3/8" DIAMETER S.S. THRU-BOLT (TWO PER SUPPORT).
46. 3/8"-16 x 2-1/2" S.S. BOLT TO SECURE BRACE TUBE TO BRACKET.
47. 1-1/ 2" x 1-1/ 2" ALUMINUM SQUARE TUBE.
48. FASCIA BRACKET (SET IN FULL BED OF SEALANT).
49. 16 GA. FRAMING BETWEEN WALL STUDS AT CONNECTION.
50. FACE OF PLASTER COLUMN BEYOND.

BURGDAHL & GRAVES
A.I.A. ARCHITECTS
A PROFESSIONAL CORPORATION · PHONE (504) 366-4433

GRETNA LIBRARY REPLACEMENT FOR JEFFERSON PARISH

102 WILLOW DRIVE GRETNA, LOUISIANA

DATE: 9-15-08
DRAWN BY: MLH
REVISIONS:

A-9

SHEET 18 OF 45