404.2.3 Door openings shall provide a clear width of 32 inches minimum.

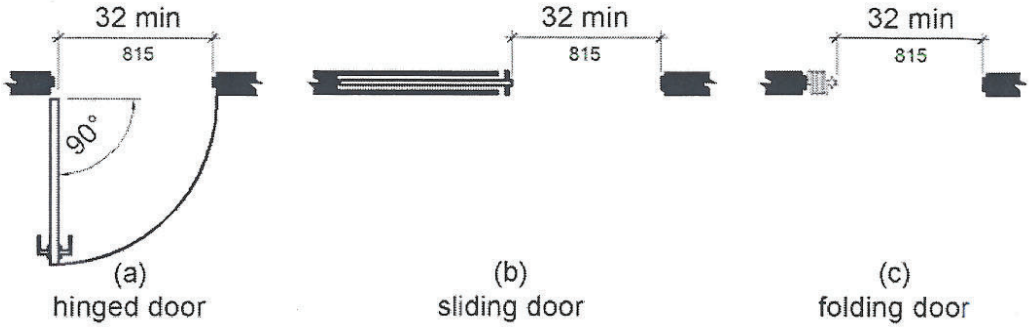

Figure 404.2.3
Clear Width of Doorways
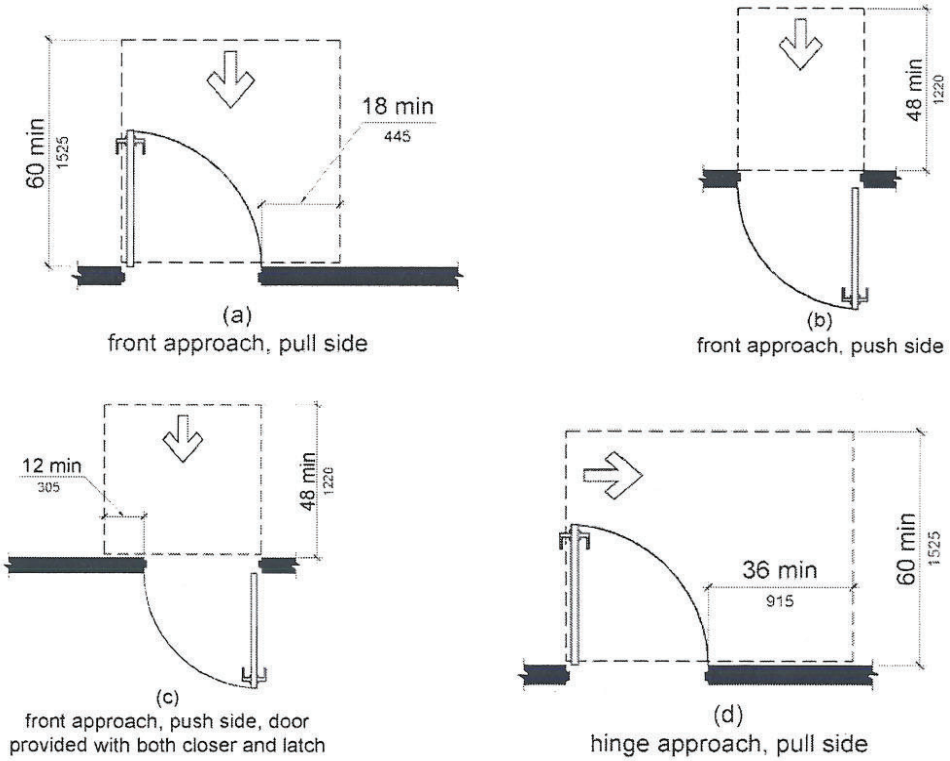
404.2.4 Provide minimum maneuvering clearances at doors and gates in accordance with Figure 404.2.4.1.