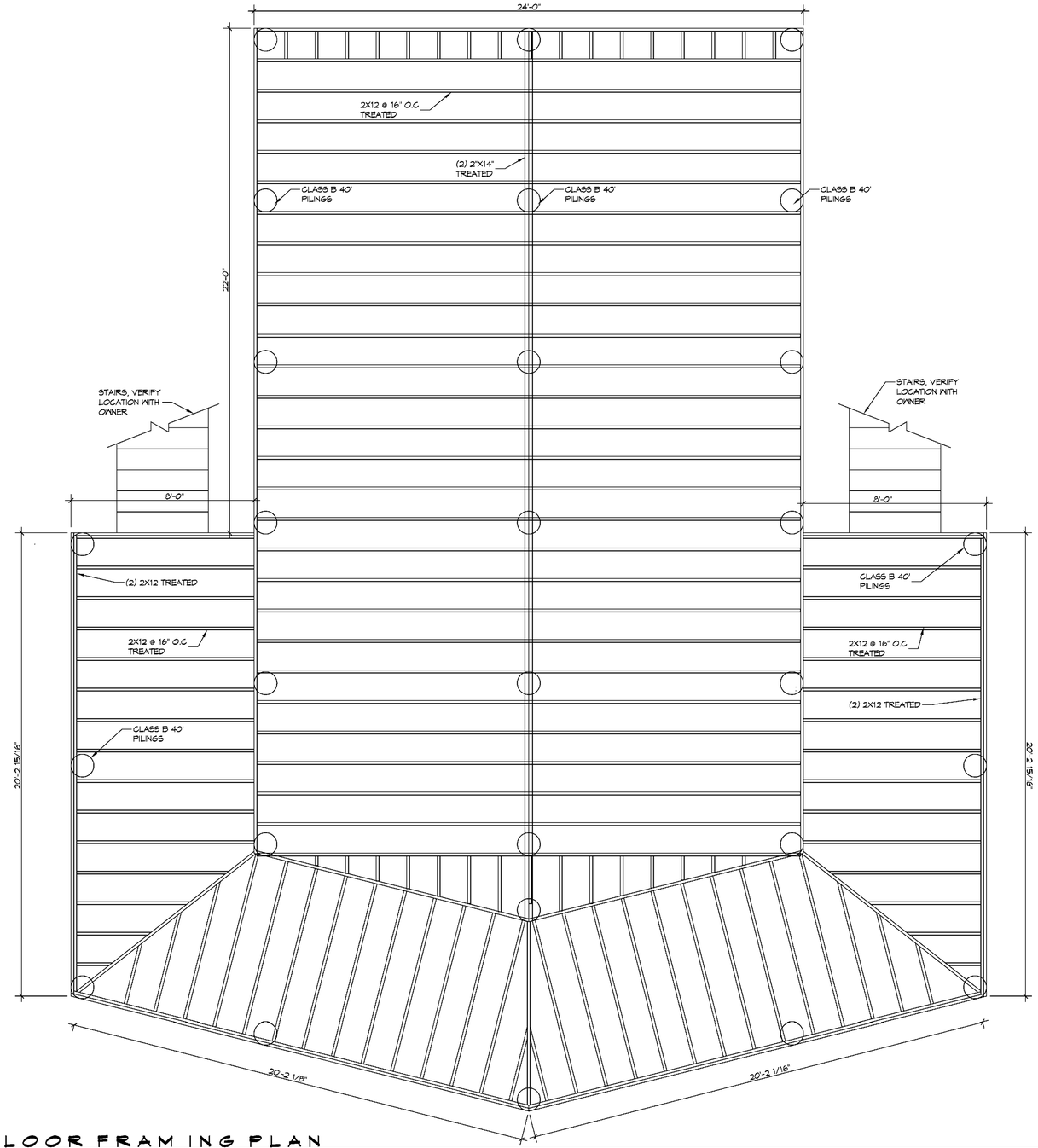

3 FLOOR FRAMING PLAN

SCALE: 3/8"= 1'-0"

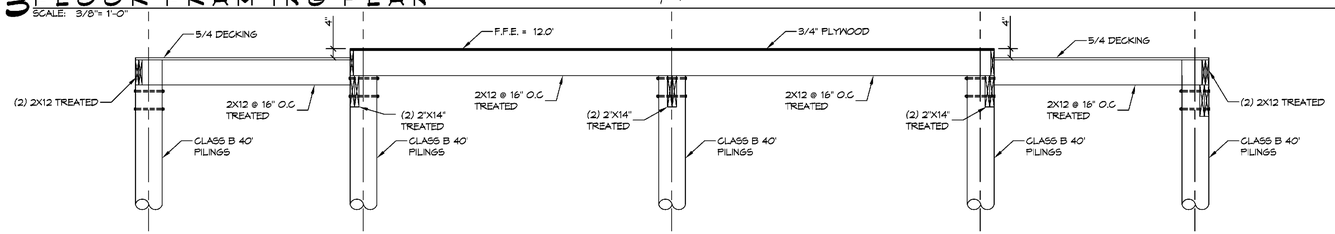

B SECTION

SCALE: 3/8"= 1'-0"

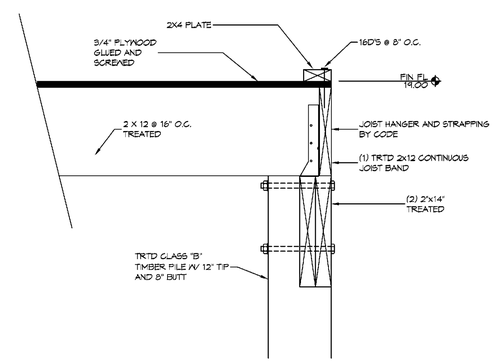

DETAIL

SCALE: 1/4" = 1'-0"

PERIMETER JOIST BAND

NOTES

1) ALL LUMBER SHALL BE TREATED
2) DOUBLE UP FLOOR JOIST UNDER FIRE PLACE, TUB AND INTERIOR LOAD BEARING WALLS.

DAMMON ENGINEERING, INC.
LOUISIANA & MISSISSIPPI
www.dammonengineering.com
info@dammonengineering.com
PH: 985.649.5832
Chief Engineer: Brian Mistich, PE
554 Old Spanish Trail
Slidell, LA 70458

#	DESCRIPTION	DATE

REVISIONS

SEAL:

STATE OF LOUISIANA
BRIAN A. MISTICH
License No. 30187
PROFESSIONAL ENGINEER
6/28/2019

STRUCTURAL DWGS

DENARDO DUNHAM

LOT 20
ISLAND DRIVE
LACOMBE, LA

JOB No: 2356 | DATE: 06-26-2019
DRAWN BY: CKD | CHECKED BY: CKD

The above drawings and specifications, designs and arrangements shown on the above drawings are the property of Dammon Engineering, and shall not be used for any purpose other than those specifically authorized by Dammon Engineering. Reproduction of these drawings or designs, in whole or in part, without the written permission of Dammon Engineering, is prohibited. Dammon Engineering, Brian Mistich, and Dammon Engineering's consultants are not responsible for any changes made to these drawings or specifications after delivery to the owner.

SHEET TITLE:
FLOOR
FRAMING PLAN

DRAWING NUMBER:

S102

SHEET No: 3 of 5

FILE NAME: J:\+ Foundations of Slidell Only\2356 - Denardo Dunham Lakeside\Current Drawings\S102 - Framing Plan.dwg PLOT DATE & TIME: Friday, June 28, 2019 11:54:53 AM