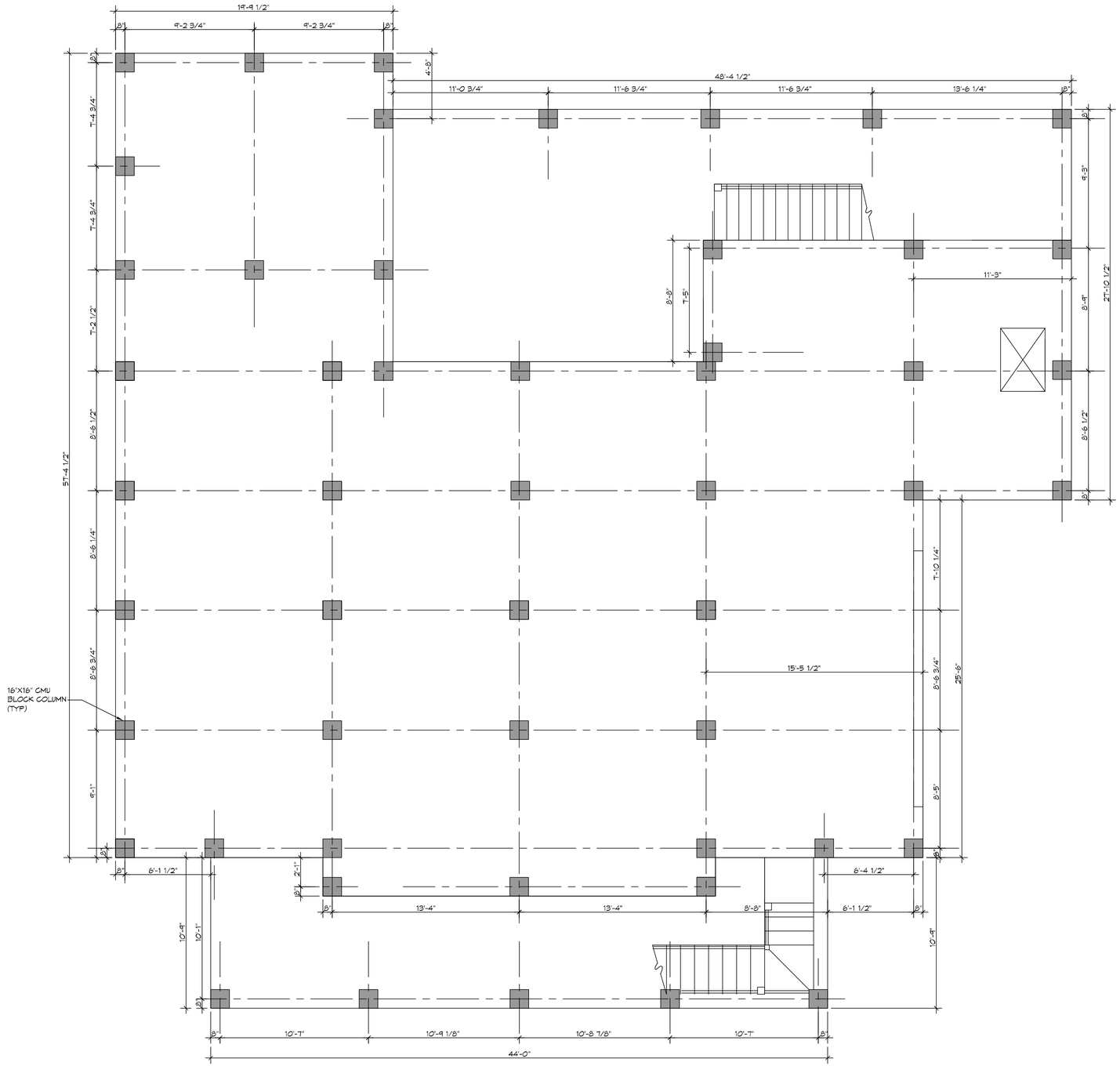

1 FIRST LEVEL
SCALE: 1/4"= 1'-0"

DESIGN CRITERIA:

THE CONSTRUCTION FOR SAID RESIDENCE, WHERE BASIC WIND SPEED IS 130 MILES PER HOUR, WIND EXPOSURE ZONE C, IS DESIGNED IN ACCORDANCE WITH: AMERICAN FOREST AND PAPER ASSOCIATION (AF&PA) WOOD FRAME CONSTRUCTION MANUAL FOR ONE AND TWO FAMILY DWELLINGS (WFCM) 2001 EDITION AS WELL AS THE INTERNATIONAL RESIDENTIAL CODE (IRC) 2015 EDITION

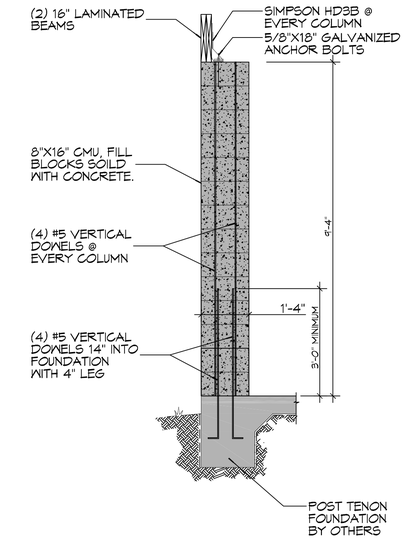

A S101|S101 SECTION
SCALE: 1/2" = 1'-0"

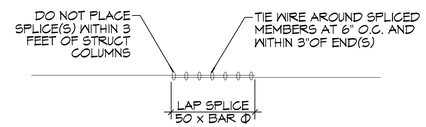

1 S101|S101 DETAIL
SCALE: 1/2" = 1'-0"

DAMMON ENGINEERING, INC.
LOUISIANA & MISSISSIPPI
www.dammonengineering.com
info@dammonengineering.com
PH: 985.649.5832
Chief Engineer: Brian Mistich, PE
554 Old Spanish Trail
Slidell, LA 70458

#	DESCRIPTION	DATE

REVISIONS

SEAL:

STRUCTURAL DWGS

GARY & KATHLEEN AVENEL

451 E. CHASE
MANDEVILLE, LA

JOB No:	2316	DATE:	11-11-2018
DRAWN BY:	CKD	CHECKED BY:	CKD

The seal/stamp on such plans, specifications, maps and other engineering documents shall be a violation of law for any person, unless acting under the direction of a licensed professional engineer, to alter in any way such documents. Ownership of all plans, specifications, maps and other engineering documents prepared by Dammon Engineering, Inc. are the property of Dammon Engineering, Inc. and shall not be used for any purpose other than the specific project for which they were prepared without the express written consent of Dammon Engineering, Inc. Dammon Engineering, Inc. assumes no responsibility for any alterations made to these documents without its express written consent.

SHEET TITLE:
FIRST LEVEL

DRAWING NUMBER:
S101

SHEET No: 1 of 4

FILE NAME: J:\1 - Projects\Gary & Kathleen Avenel 451 Chase St\S-Structural\Current Drawings\S101 - Ground Level Plan.dwg, PLOT DATE & TIME: Monday, November 11, 2019 3:45:50 PM

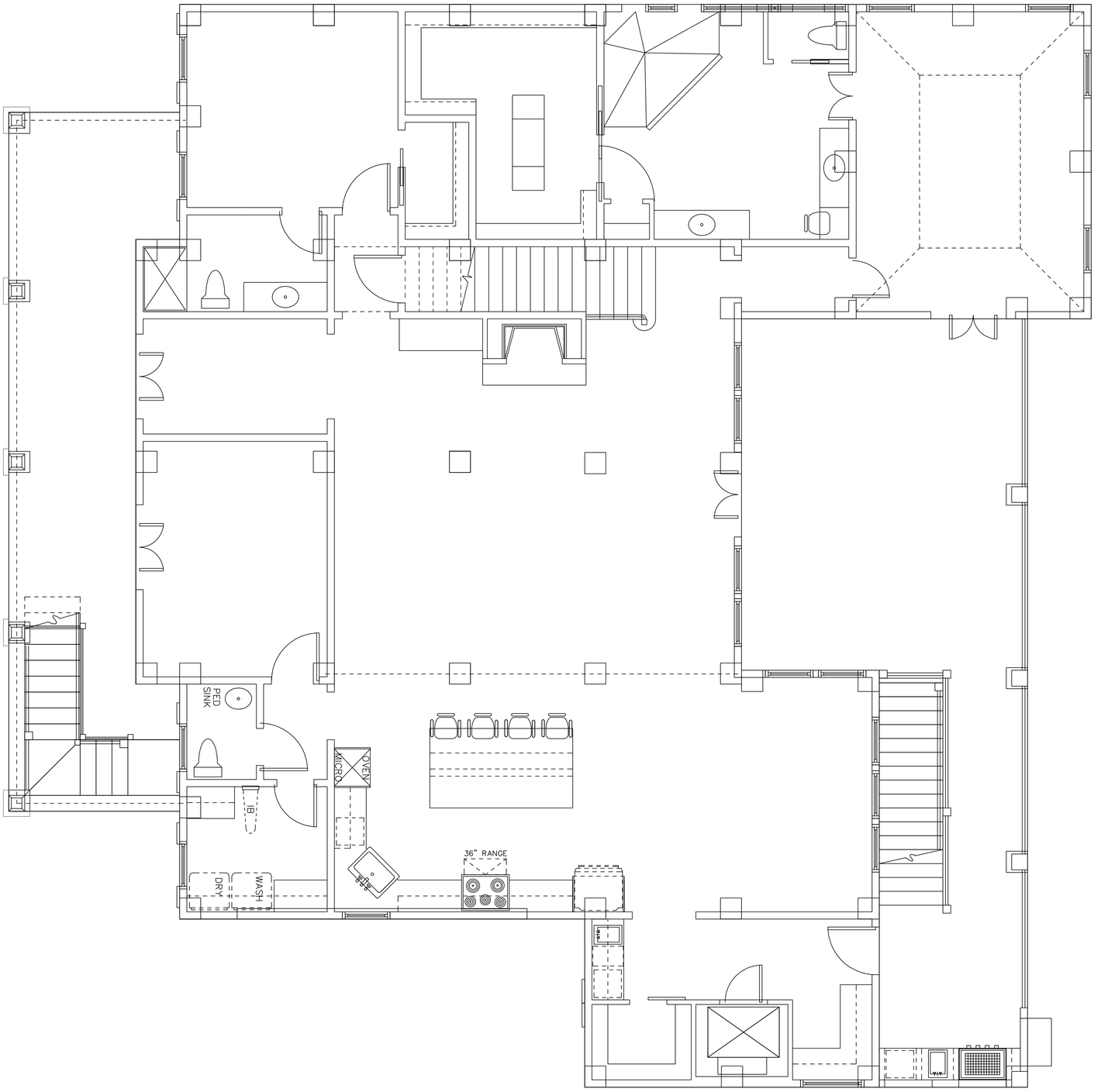
PED
SINK
OVEN
MICRO
36" RANGE
DRY
WASH