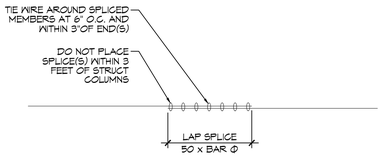

REBAR SPLICE

SCALE: 1/2" = 1' - 0"

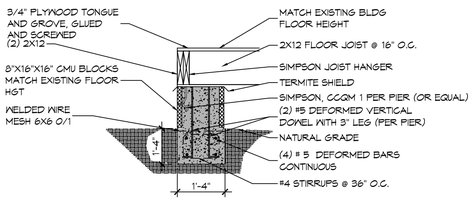

FOUNDATION SECTION

SCALE: 1/2" = 1' - 0"

GENERAL FOUNDATION NOTES

1. ALL DIMENSIONS ARE EDGE OF CONCRETE (EOC) TO EDGE OF CONCRETE (EOC) UNLESS NOTED OTHERWISE.
2. VERIFY ALL PLUMBING ROUGH-IN LOCATIONS AND DOUBLE UP ON FLOOR JOIST IN THOSE AREAS.
3. CONCRETE MIX SHALL HAVE A MINIMUM COMPRESSIVE STRENGTH OF 4000 PSI AT 28 DAYS. CONCRETE MIX SHALL BE IN ACCORDANCE WITH ACI-318.
4. ALL CONVENTIONAL REINFORCING STEEL SHALL MEET ASTM-A615 (GRADE 60).
5. ONE LAYER OF POLYETHYLENE VAPOR BARRIER SHALL BE PLACED UNDER ALL CONCRETE. VAPOR RETARDER TO BE MINIMUM 10 MIL, THICKNESS; ASTM E 1745 CLASS A, PERMEANCE LESS THAN 0.01 PERMS, EQUAL TO STEGO INDUSTRIES STEGO WRAP, ECOSHIELD-E 15 MIL BY EPRO, OR IRONBAR 15 BY FLATIRON FILMS. PROVIDE APPROPRIATE ACCESSORIES FOR A COMPLETE SYSTEM.
6. ALL REINFORCING STEEL AND MESH SHALL BE SECURELY SUPPORTED TO PREVENT BOTH VERTICAL AND HORIZONTAL MOVEMENT DURING CONCRETE PLACEMENT.
7. THE CONTRACTOR SHALL VERIFY ALL DROPS, OFFSETS, BRICK LEDGES, DIMENSIONS AND CONFIGURATIONS.
8. GRADE BEAM DIMENSIONS MAY VARY BY -5%, +20%.
9. FILL, AS A MINIMUM QUALITY, SHALL BE 40% CLAY AND 60% SANDY MIXTURE, PLACED IN 6" LIFTS AND COMPACTED TO A MINIMUM OF 95% STANDARD PROCTOR. FOOTINGS ARE DESIGNED TO USE SOIL WITH A BEARING PRESSURE OF 2000 LBS. PER SQUARE FOOT OR MORE. IT IS RECOMMENDED THAT THE OWNER VERIFY ALLOWABLE SOIL BEARING PRESSURE CAPACITY BY CONTRACTING THE SERVICES OF A SOILS ENGINEERING COMPANY.
10. ALL SOIL BELOW SLAB SHALL RECEIVE TERMITE TREATMENT.

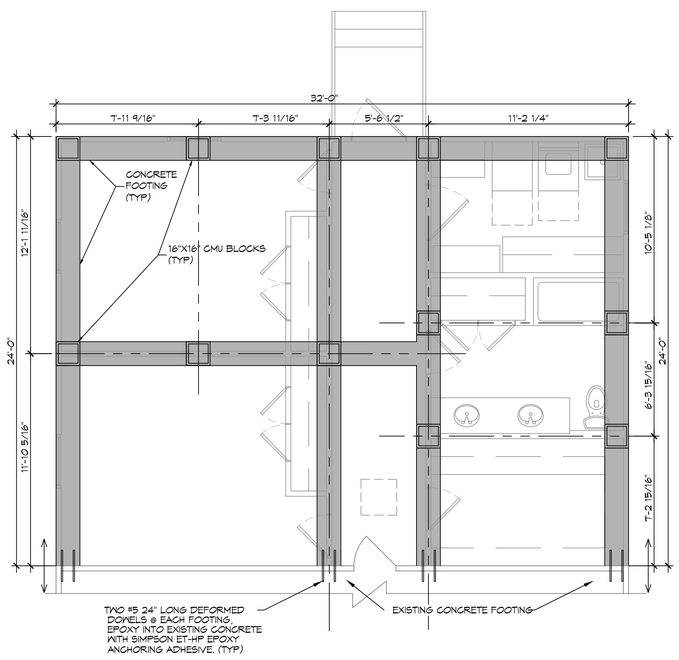

2 FOUNDATION PLAN

SCALE: 1/4" = 1'-0"

FOUNDATION PLAN

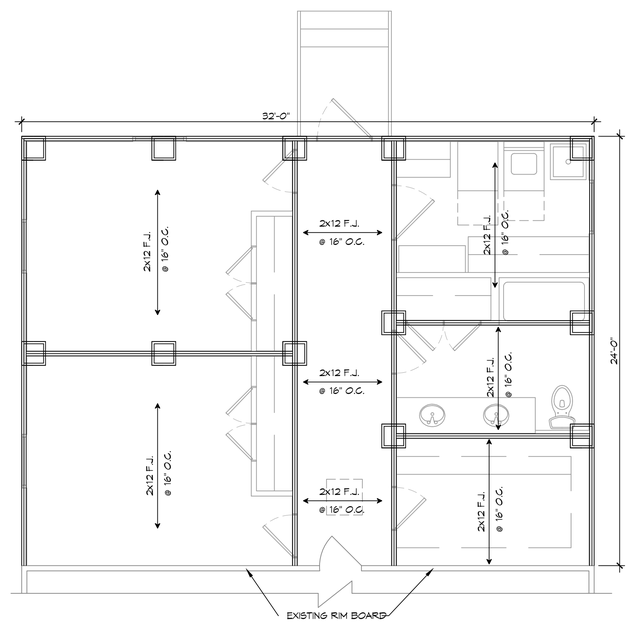

3 FLOOR JOIST PLAN

SCALE: 1/2" = 1'-0"

WOOD FRAMING

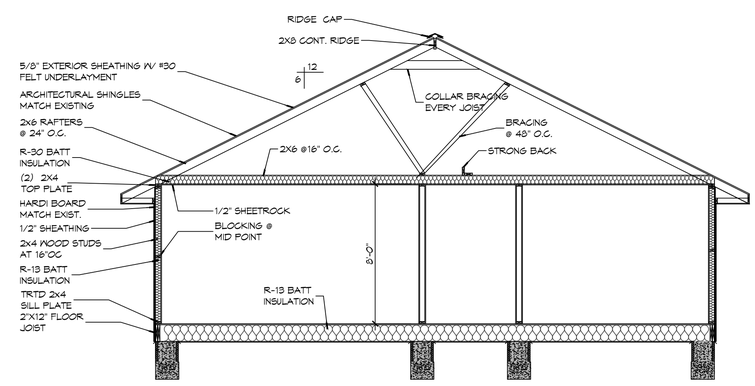

4 TYPICAL SECTION

SCALE: 1/2" = 1'-0"

WOOD FRAME

DAMMON ENGINEERING, INC.
LOUISIANA & MISSISSIPPI
www.dammonengineering.com
info@dammonengineering.com
PH: 985-649-5822
Chief Engineer: Brian Mistich, PE
554 Old Spanish Trail
Slidell, LA 70458

#	DESCRIPTION	DATE
	REVISIONS	

SEAL:

RESIDENTIAL ADDITION
SANDRA MORTON WILLIAMS
4391 TUPELO
SLIDELL, LA 70461

DATE:	05-15-24
CHECKED BY:	BAM
CKD	
JOB No:	
DRAWN BY:	

THESE PLANS AND SPECIFICATIONS REMAIN THE PROPERTY OF DAMMON ENGINEERING, INC. ANY REPRODUCTION OR USE OF THESE PLANS AND SPECIFICATIONS WITHOUT WRITTEN CONSENT OF DAMMON ENGINEERING, INC. IS PROHIBITED. ALL ARTICLES, PLANS, SPECIFICATIONS, COMPUTATIONS, OR OTHER DOCUMENTS OR INSTRUMENTS PREPARED BY DAMMON ENGINEERING, INC. ARE THE PROPERTY OF DAMMON ENGINEERING, INC. AND SHALL BE RETURNED AFTER COMPLETION OF THE PROJECT TO WHICH THEY HAVE BEEN PREPARED IF NOT PREVIOUSLY RETURNED UPON REQUEST OF DAMMON ENGINEERING, INC.

SHEET TITLE:
FOUNDATION PLAN, FLOOR FRAMING PLAN AND SECTION

DRAWING NUMBER:

S101

SHEET No: 2 of 7

FILE NAME: J:\- Foundations w/ Structural Only\4361 Tupelo Drive Kelly Wood\Volume Foundation\Current Drawings\S101-Foundation Plan.dwg PLOT DATE & TIME: Wednesday, May 15, 2024 4:19:51 PM