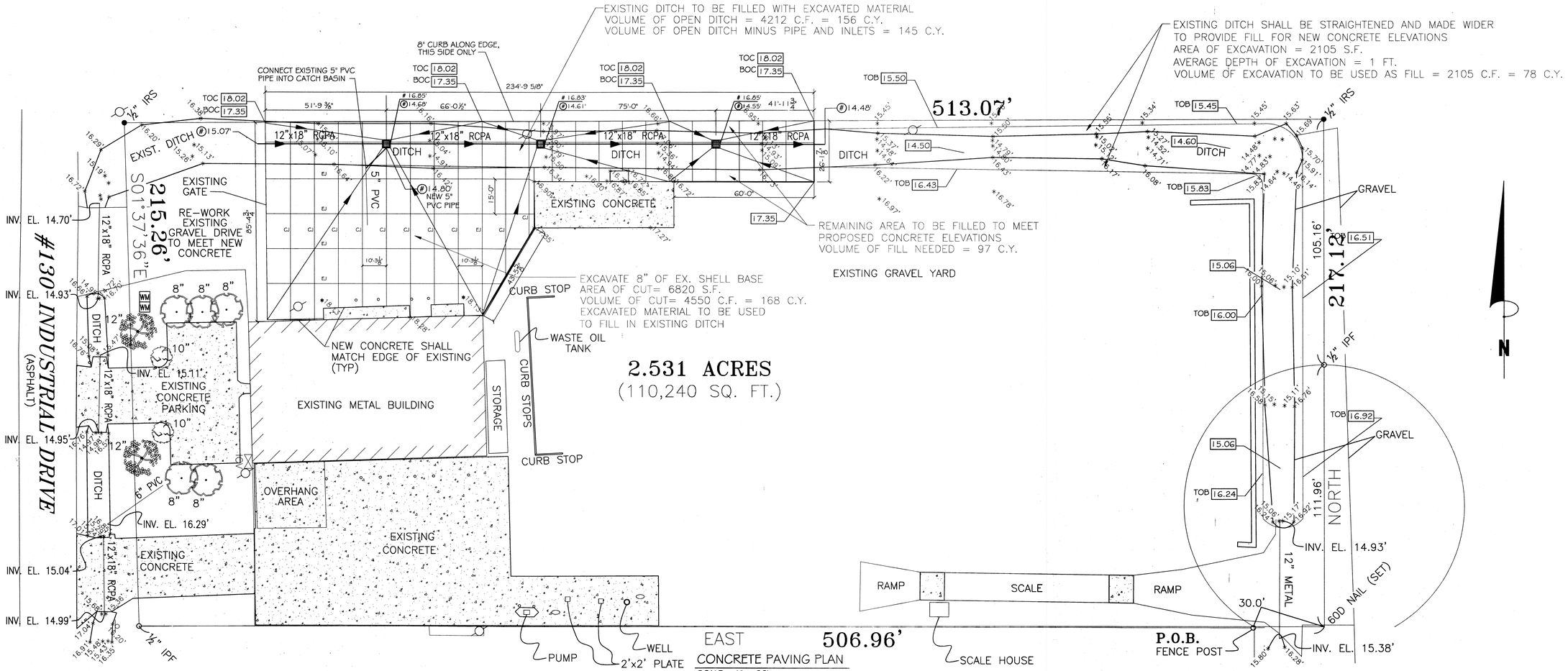

CONCRETE PAVING PLAN
SCALE: 1" = 30'

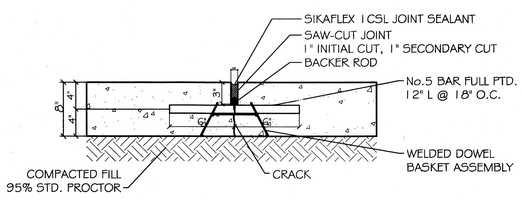

CONTROL JOINT DETAIL
N.T.S.

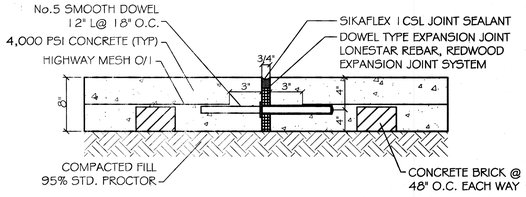

EXPANSION JOINT DETAIL
N.T.S.

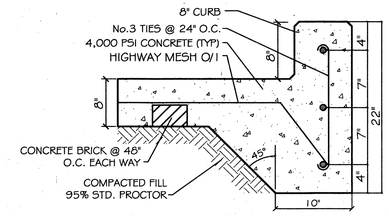

TYPICAL CURB DETAIL
N.T.S.

DRAINAGE PLAN NOTES:

1. ELEVATIONS SHOWN ARE M.S.L.
2. DRAIN PIPE SHALL BE 12"X18" RCPA
3. FIELD VERIFY ALL ELEVATIONS AND DRAINAGE SYSTEM PLACEMENT PRIOR TO START OF WORK FOR PROPER DRAINAGE FLOW.

PAVING NOTES:

1) ALL NEW CONCRETE SHALL SHALL HAVE A MINIMUM COMPRESSIVE STRENGTH OF 4,000 PSI AT 28 DAYS AND A MINIMUM THICKNESS OF 8". CONCRETE MIX SHALL BE IN ACCORDANCE WITH THE LATEST REVISION OF ASTM C-150 TYPE 1.
2) CONCRETE PAVING THICKNESS SHALL VARY AS FOLLOWS:
   A) DRIVELANES = 8" THICKNESS
3) ALL REINFORCING STEEL SHALL MEET ASTM-A615 (GRADE 60).
4) ALL REINFORCING STEEL SHALL BE SECURELY SUPPORTED TO PREVENT BOTH VERTICAL AND HORIZONTAL MOVEMENT DURING CONCRETE PLACEMENT. ALL CONTROL AND EXPANSION JOINTS SHALL BE LOCATED AND INSTALLED AS SHOWN ON THE PAVING PLAN AND IN ACCORDANCE WITH THE MANUFACTURER'S RECOMMENDATIONS.
5) ALL SUB GRADE FILL SHALL BE SELECT GRANULAR MATERIAL COMPACTED TO 95% STANDARD PROCTOR DENSITY IN A MAXIMUM OF 6" LIFTS.
6) CONTRACTOR SHALL CONTACT THEIR REGULATORY DEPARTMENT OF ENGINEERING PRIOR TO CONDUCTING ANY WORK.
7) ANY WORK WITHIN THE ROADWAY OR ADJACENT TO THE ROADWAY CAUSING AN INTERFERENCE TO VEHICULAR TRAFFIC MUST CONFORM TO THE REQUIREMENTS SET FORTH BY THE UNIFORM MANUAL OF TRAFFIC CONTROL DEVICES OF THE STATE OF LOUISIANA. THE CONTRACTOR MUST FURNISH ALL NECESSARY TRAFFIC SIGNS AND/OR BARRICADES AND MAINTAIN THEM DURING CONSTRUCTION ACTIVITY.

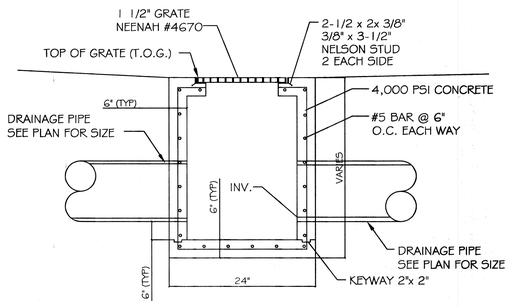

TYPICAL DROP INLET
N.T.S.

LEGEND

	- PROPERTY LINE
CJ	- CONTROL JT.
EJ	- EXPANSION JT.
(#)0.00'	- INVERT ELEVATION
# 0.00'	- TOP OF GRATE ELEVATION
00.00	- NEW ELEVATION
TOC	- TOP OF CURB
BOC	- BOTTOM OF CURB
TOB	- TOP OF BANK

DAMMON ENGINEERING INC.
Architects & Engineers
dammoneng@bellsouth.net
PHONE: 985-649-5832
FAX: 985-641-5350
CHIEF ENGINEER: EMMETT DAMMON, P.E.
CHIEF ARCHITECT: ROBERT WILTSE
554 OLD SPANISH TRAIL
SLIDELL, LA 70458

The above plans are the sole property of Dammon Engineering and are protected by copyright laws and other intellectual property laws and treaties. Unauthorized use of these plans and specifications is prohibited and may be prosecuted to the fullest extent of the law. Unauthorized use includes, but is not limited to, copying, publication, distribution, or use in a way for which they are not intended without the express written consent of Dammon Engineering. Visual contacts with these plans and specifications shall constitute prima facie evidence of acceptance of these restrictions.

B. & W. TRUCKING INC.
130 INDUSTRIAL PARK
SLIDELL, LA
70458

JOB No:	
DRAWN BY:	CKD
DATE:	09-19-2012
CHECKED BY:	CKD

REVISIONS

#	DESCRIPTION	DATE

STATE OF LOUISIANA
EMMETT G. DAMMON, JR.
License No. 8795
9-19-12
PROFESSIONAL ENGINEER

FLOOR PLAN

SHEET No: 1 OF 1

C-1