DESIGN CRITERIA

THE CONSTRUCTION FOR SAID RESIDENCE, WHERE BASIC WIND SPEED IS 140 MILES PER HOUR, WIND EXPOSURE ZONE B, IS DESIGNED IN ACCORDANCE WITH: AMERICAN FOREST AND PAPER ASSOCIATION (AF&PA) WOOD FRAME CONSTRUCTION MANUAL FOR ONE AND TWO FAMILY DWELLINGS (WFCM) 2001 EDITION AS WELL AS THE INTERNATIONAL RESIDENTIAL CODE (IRC) 2021 EDITION

PLANNING

ZONED RESIDENTIAL

FLOOD ZONE

ZONE "X"

LEGEND

- - - —— - - - PROPERTY LINE

SHEET INDEX

SHEET #	SHEET TITLE
C101	SITE PLAN
A101	FLOOR PLAN
A102	HOUSE ELEVATIONS AND CABINETS
A103	ROOF PLAN AND HOUSE ELEVATIONS
S101	FOUNDATION PLAN
S102	TYPICAL CONNECTION DETAILS

Living Area	2082
Garage	482
Front Porch	124
Storage & Bath	387
Patio	540
Total U.B.	3,615

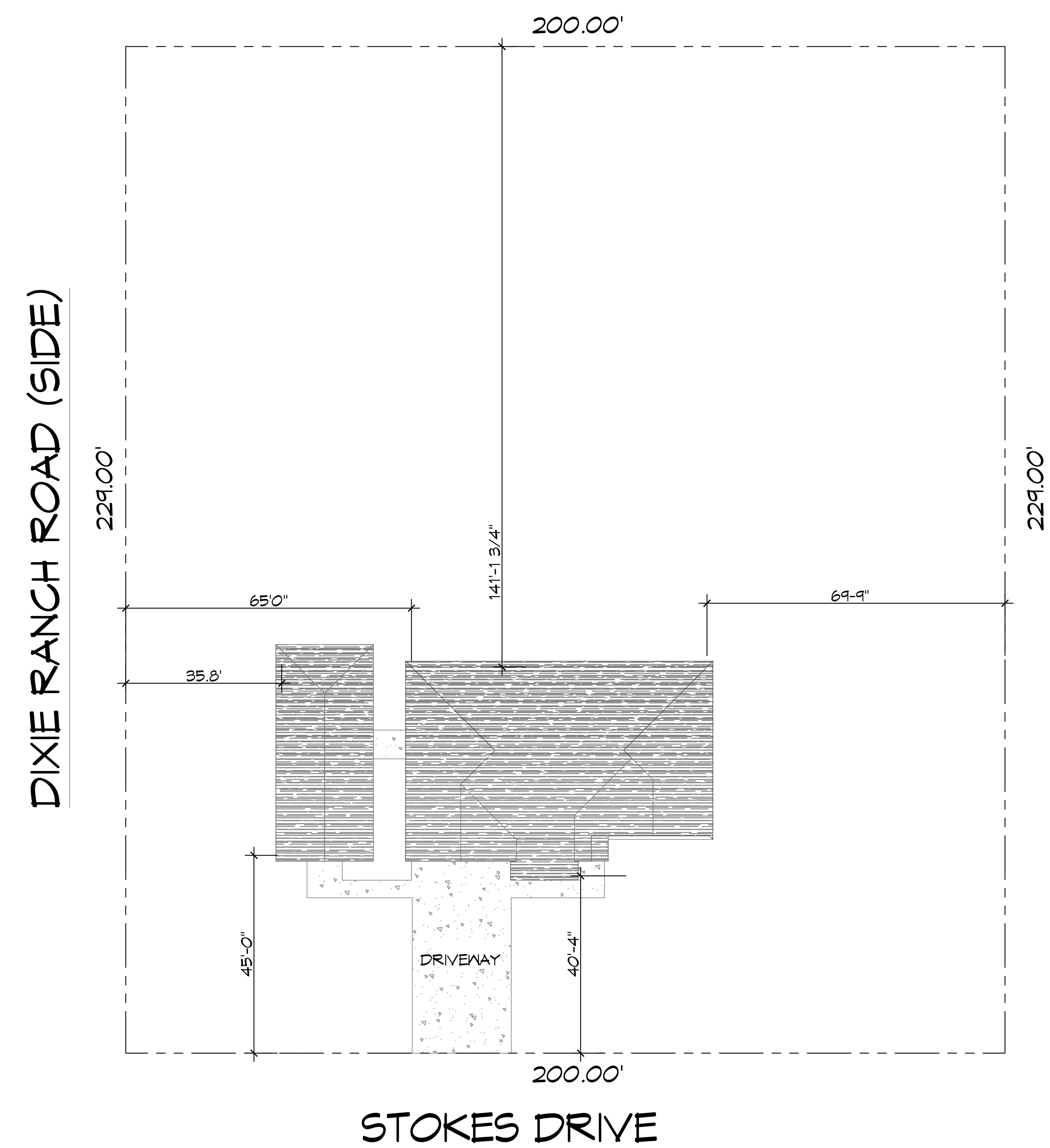

1 SITE PLAN
SCALE: 1/20" = 1'-0"

OVERALL SITE PLAN

DAMMON ENGINEERING, INC.
LOUISIANA & MISSISSIPPI
Chief Engineer: Brian Mistich, PE
554 Old Spanish Trail
Slidell, LA 70458
www.dammonengineering.com
info@dammonengineering.com
PH: 985.649.5832

#	DESCRIPTION	REVISIONS	DATE

HUGO MARTINEZ

LOT 3, STOKES DRIVE
OAK RANCH ESTATES
SLIDELL, LA. 70460

JOB No:		DATE:	10-03-2023
DRAWN BY:	CKD	CHECKED BY:	BAM

The above drawings and specifications, designs and arrangements represented thereby are and shall remain the property of Dammon Engineering, and no part thereof shall be copied, disclosed to others, or used in connection with any work or project other than the specific project for which the have been prepared and developed without written consent of Dammon Engineering. Visual contact with these drawings or specifications shall constitute conclusive evidence of acceptance of these restrictions.

SHEET TITLE:
SITE PLAN

DRAWING NUMBER:

C101

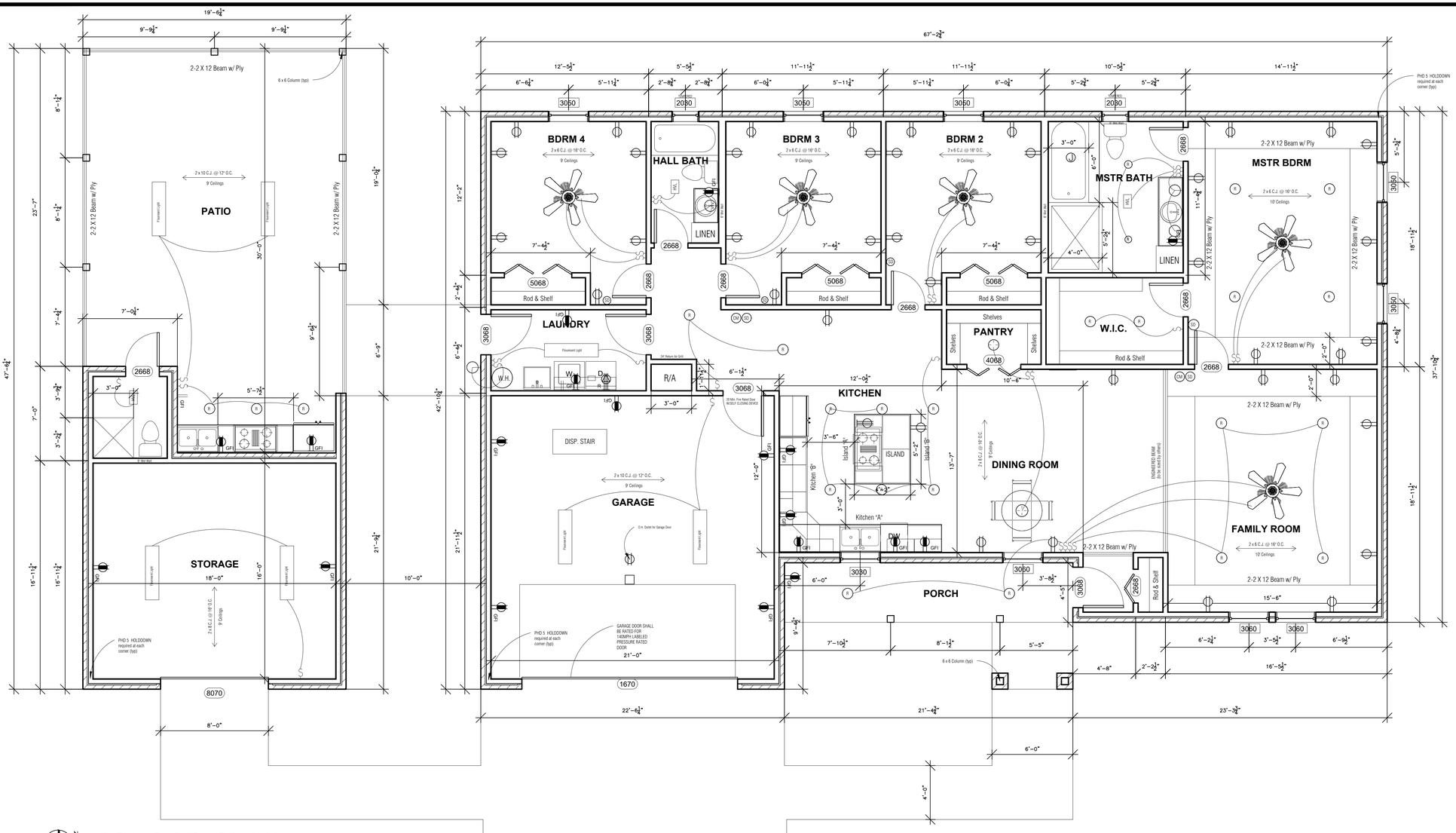

2 FLOOR PLAN
SCALE: 1/4"= 1'-0"

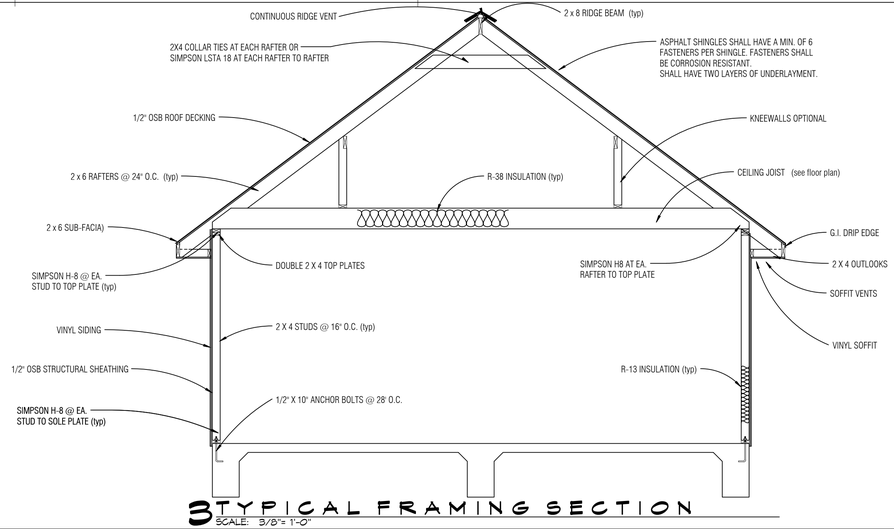

3 TYPICAL FRAMING SECTION
SCALE: 3/8"= 1'-0"

DAMMON ENGINEERING, INC.
LOUISIANA & MISSISSIPPI
www.dammonengineering.com
info@dammonengineering.com
PH: 985.649.5832
Chief Engineer: Brian Mistich, PE
564 Highway 77 Trail
Slidell, LA 70458

REVISIONS

#	DESCRIPTION	DATE

STATE OF LOUISIANA
BRIAN A. MISTICH
License No. 30187
PROFESSIONAL ENGINEER

HUGO MARTINEZ
LOT 3, STOKES DRIVE
OAK RANCH ESTATES
SLIDELL, LA 70460

JOB No: | DRAWN BY: CAD | DATE: 10-03-2023 | CHECKED BY: BAM

All ideas, designs, arrangements and plans indicated or represented by this drawing are owned by and the property of Dammon Engineering, Inc. and were created, evolved and developed for use on and in connection with the specified project. None of such ideas, designs, arrangements or plans shall be used by or disclosed to any person, firm or corporation for any purpose whatsoever without the written permission of Dammon Engineering, Inc. Visual contact with these drawings shall constitute prima facie evidence of the acceptance of these restrictions.

SHEET TITLE:
FLOOR PLAN

DRAWING NUMBER:
A101

SHEET No: 2 of 6

FILE NAME: J:_Projects_w_Structural Only\Hugo Martinez, Stokes, & Cornet\Current Drawings\A101 - Floor Plan.dwg PLOT DATE & TIME: Thursday, October 12, 2023 11:23:49 AM

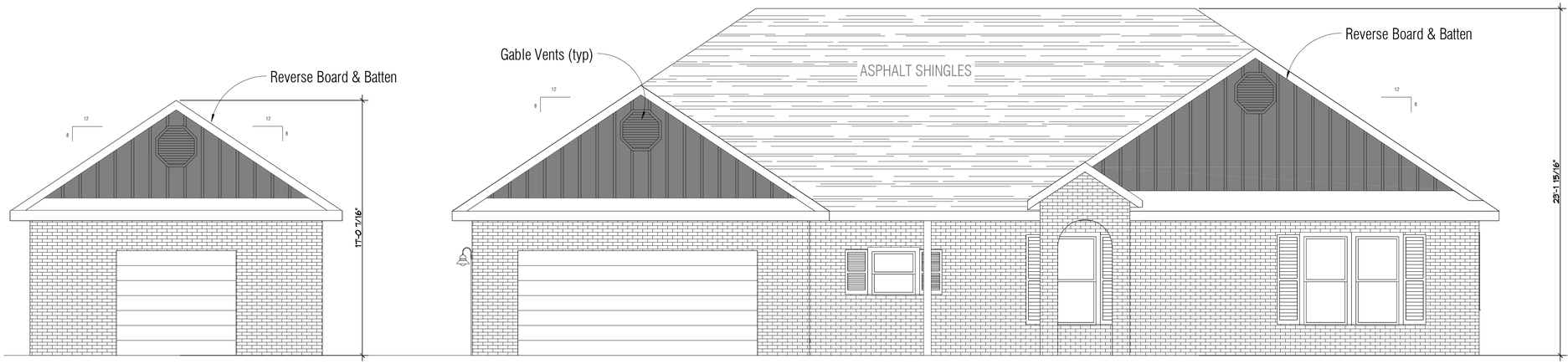

4 FRONT ELEVATION
SCALE: 1/4" = 1'-0"

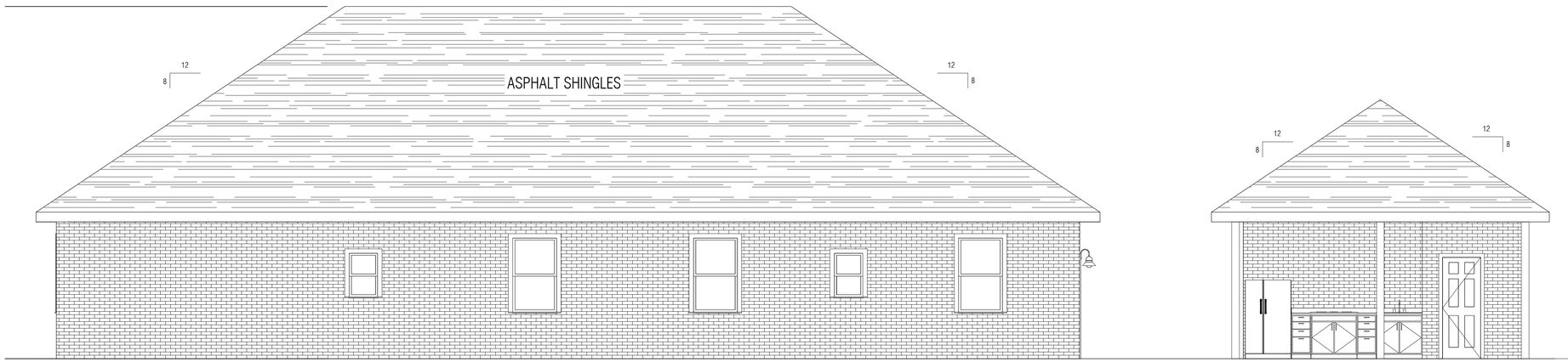

5 REAR ELEVATION
SCALE: 1/4" = 1'-0"

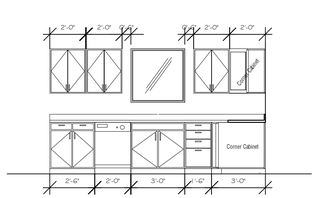

6 KITCHEN "A"
SCALE: 1/4" = 1'-0"

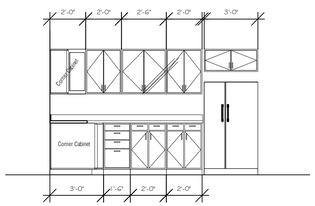

7 KITCHEN "B"
SCALE: 1/4" = 1'-0"

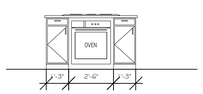

8 ISLAND "A"
SCALE: 1/4" = 1'-0"

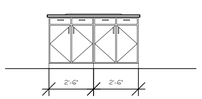

9 ISLAND "B"
SCALE: 1/4" = 1'-0"

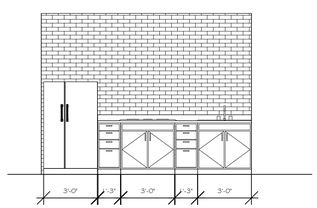

10 OUTDOOR KITCHEN
SCALE: 1/4" = 1'-0"

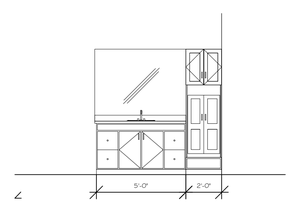

11 MASTER BATH
SCALE: 1/4" = 1'-0"

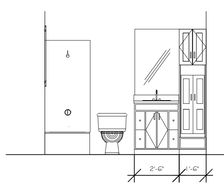

12 HALL BATH
SCALE: 1/4" = 1'-0"

DAMMON ENGINEERING, INC.
LOUISIANA & MISSISSIPPI

www.dammonengineering.com
info@dammonengineering.com
PH: 985.649.5832

Chief Engineer: Brian Mistich, PE
554 Old Spanish Trail
Slidell, LA 70458

REVISIONS

#	DESCRIPTION	DATE

STATE OF LOUISIANA
BRIAN A. MISTICH
License No. 30187
PROFESSIONAL ENGINEER

HUGO MARTINEZ

LOT 3, STOKES DRIVE
OAK RANCH ESTATES
SLIDELL, LA. 70460

JOB No: | DATE: 10-03-2023
DRAWN BY: CKD | CHECKED BY: BAM

SHEET TITLE:
BLDG
ELEVATIONS
& CABINETS

DRAWING NUMBER:
A102

SHEET No: 3 of 6

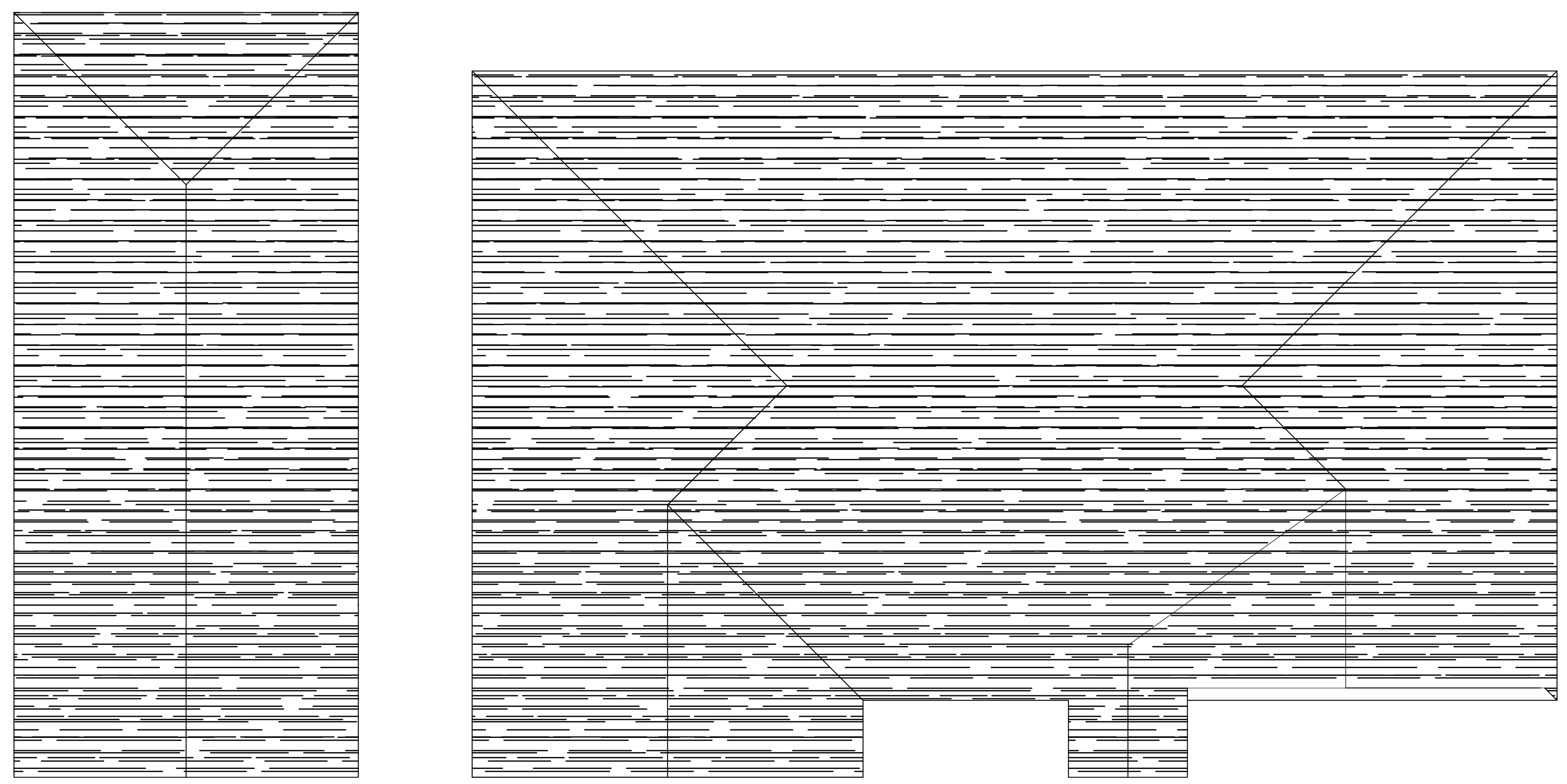

13 ROOF PLAN
SCALE: 1/4" = 1'-0"

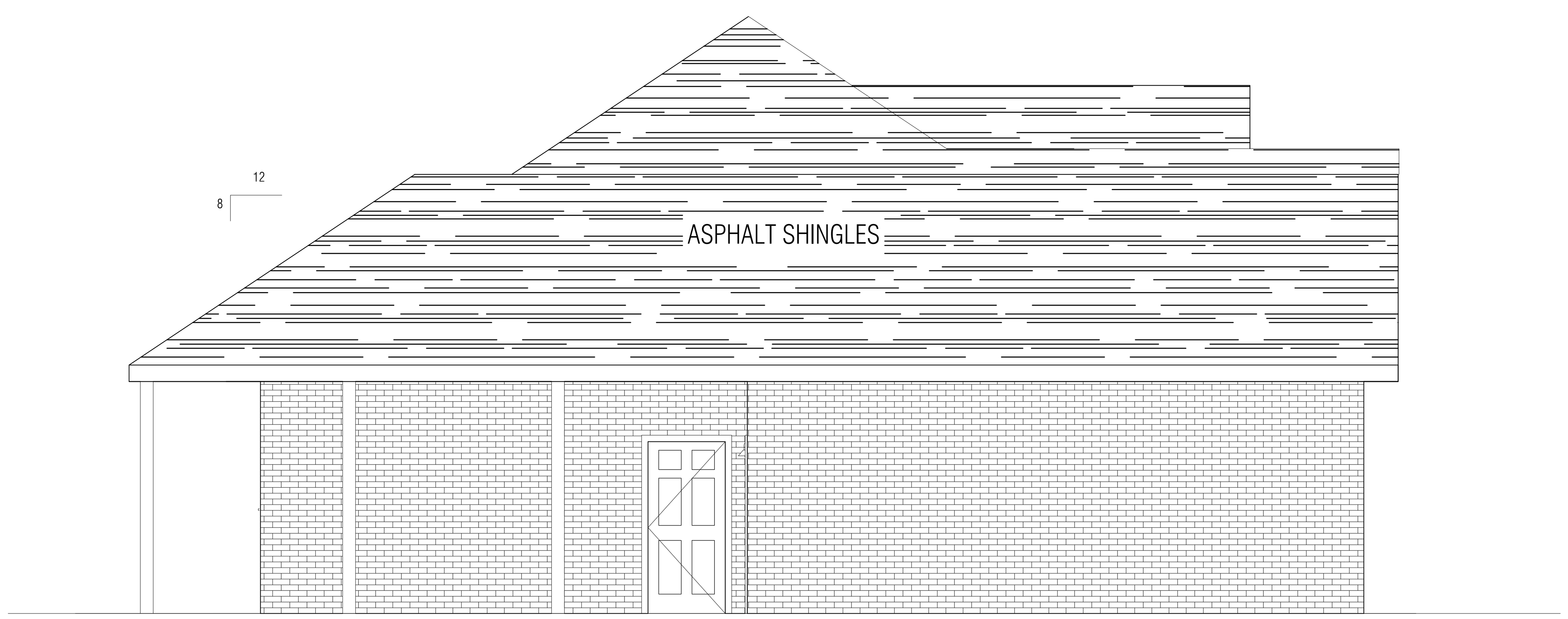

14 LEFT ELEVATION
SCALE: 1/4" = 1'-0"

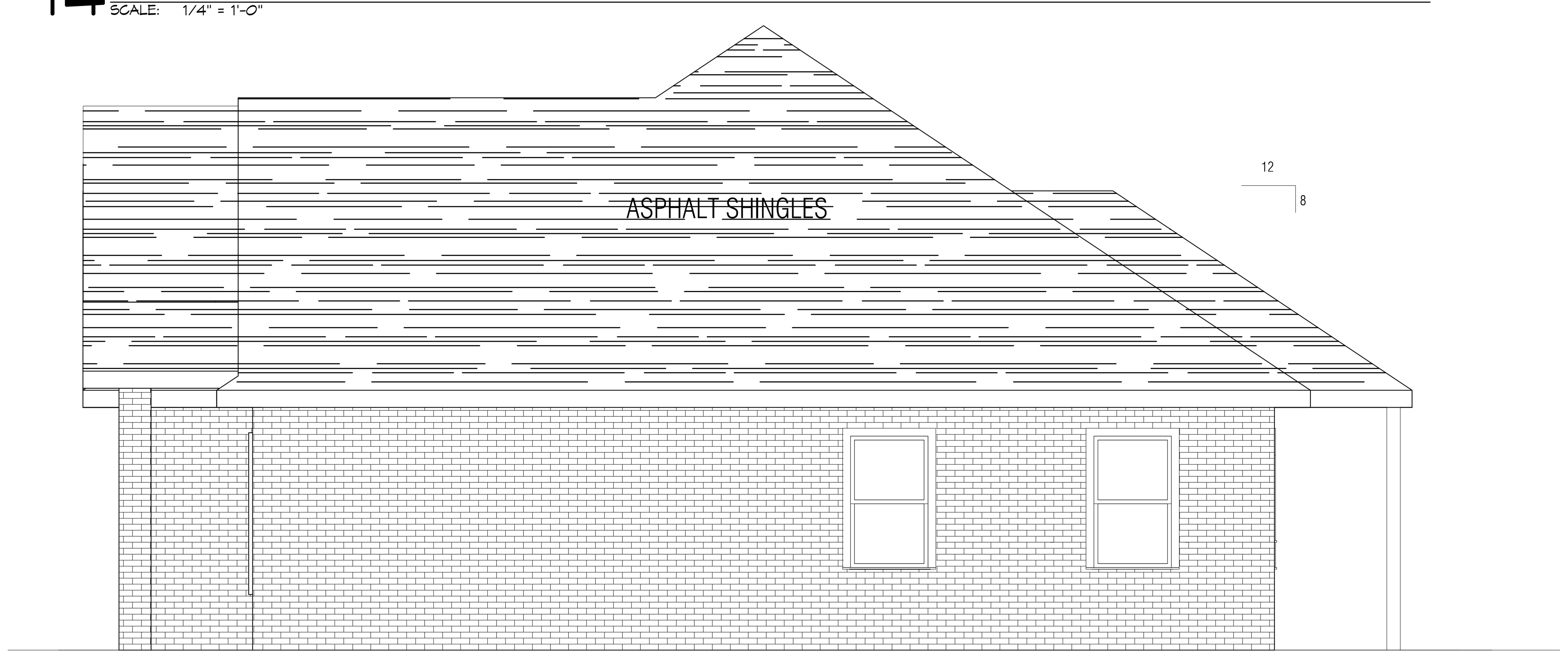

15 RIGHT ELEVATION
SCALE: 1/4" = 1'-0"

FRAMING NOTES

DESIGN CRITERIA

THIS RESIDENCE IS DESIGNED IN ACCORDANCE WITH THE 2021 I.R.C. AND THE AMERICAN FOREST & PAPER ASSOCIATION (A.F. & P.A.) WOOD FRAME CONSTRUCTION MANUAL (W.F.C.M.) FOR ONE AND TWO FAMILY DWELLINGS AT MIN. 140 M.P.H.

1. ALL EMERGENCY ESCAPE AND RESCUE OPENINGS AT GRADE FLOOR SHALL HAVE A MIN. NET CLEAR OPENING OF 5 SQ.FT. ALL OTHERS SHALL HAVE A MIN. NET OPENING OF 5.7 SQ. FT. ALL EMERGENCY OPENINGS SHALL HAVE A MIN. NET CLEAR OPENING HEIGHT OF 24" AND A MIN. WIDTH OF 20" AND A MAX SILL HEIGHT OF 44".

2. ALL WINDOWS IN BUILDING TO BE FITTED W/ WOOD STRUCTURAL PANELS W/ A MIN. THICKNESS OF 7/16" AND A MAX SPAN 8'. ALL PANELS TO BE PRECUT TO COVER THE OPENINGS W/ ATTACHMENT HARDWARE PROVIDED AND INSTALLED IN ACCORDANCE W/ TABLE R301.2.1.2.

3. ALL WINDOWS SHALL HAVE A MAX. GLAZING U-FACTOR OF .75 AND A SOLAR HEAT GAIN COEFFICIENT RATING SHALL NOT EXCEED .40.

4. OPENINGS BETWEEN GARAGE AND RESIDENCE SHALL HAVE A MIN. 20 MINUTE FIRE RATING OR BE SOLID W/ A MIN. THICKNESS OF 1 3/8".

SMOKE ALARMS:

SMOKE ALARMS SHALL BE INSTALLED IN EACH SLEEPING ROOM AND OUTSIDE OF EACH SLEEPING AREA IN THE IMMEDIATE VICINITY OF THE BEDROOMS, AND ON EACH ADDITIONAL STORY. SMOKE ALARMS SHALL BE HARDWIRED WITH BATTERY BACKUP.

CARBON MONOXIDE DETECTORS:

CARBON MONOXIDE DETECTORS SHALL COMPLY WITH SECTION R315.

CARBON MONOXIDE DETECTORS SHALL BE INSTALLED OUT-SIDE OF EACH SEPARATE SLEEPING AREA IN THE IMMEDIATE VICINITY OF THE BEDROOMS. SMOKE ALARMS SHALL BE HARDWIRED WITH BATTERY BACKUP. COMBINATION CARBON MONOXIDE/SMOKE ALARMS SHALL BE PERMITTED TO BE USED IN LIEU OF CARBON MONOXIDE DETECTORS.

STAIRWAYS:

STAIRWAYS SHALL NOT BE LESS THAN 36 INCHES IN CLEAR WIDTH AT ALL POINTS ABOVE THE PERMITTED HANDRAIL HEIGHT AND BELOW THE REQUIRED HEADROOM HEIGHT.

TREADS and RISERS:

THE MAXIMUM RISER HEIGHT SHALL BE 7-3/4 INCHES AND THE MINIMUM TREAD DEPTH SHALL BE 10 INCHES. THE GREATEST RISER HEIGHT OR TREAD DEPTH WITHIN ANY FLIGHT OF STAIRS SHALL NOT EXCEED THE SMALLEST BY MORE THAN 3/8 INCH.

WINDERS:

WINDERS ARE PERMITTED, PROVIDED THAT THE WIDTH OF THE TREAD AT A POINT NOT MORE THAN 12 INCHES FROM THE SIDE WHERE THE TREADS ARE THE NARROWER IS NOT LESS THAN 10 INCHES AND THE MINIMUM WIDTH OF ANY TREAD IS NOT LESS THAN 6 INCHES.

HEADROOM:

THE MINIMUM HEADROOM IN ALL PARTS OF THE STAIRWAY SHALL NOT BE LESS THAN 6 FEET, 8 INCHES MEASURED VERTICALLY FROM THE SLOPED PLANE ADJOINING THE TREAD NOSING OR FROM THE FLOOR SURFACE OF THE PLATFORM OR LANDING.

HANDRAILS:

HANDRAILS HAVING MINIMUM AND MAXIMUM HEIGHTS OF 34 INCHES AND 38 INCHES, RESPECTIVELY, MEASURED VERTICALLY FROM THE NOSING OF THE TREADS, SHALL BE PROVIDED ON AT LEAST ONE SIDE OF THE STAIRWAYS. ALL REQUIRED HANDRAILS SHALL BE CONTINUOUS THE FULL LENGTH OF THE STAIRS. ENDS SHALL BE RETURNED OR SHALL TERMINATED IN NEWEL POSTS OR SAFETY TERMINALS. HANDRAILS SHALL HAVE A SPACE OF NOT LESS THAN 1.5 INCHES BETWEEN THE WALL AND THE HANDRAIL.

FIRE BLOCKING:

FIRE BLOCKING SHALL BE REQUIRED TO CUT OFF ALL CONCEALED DRAFT OPENINGS TO FORM AN EFFECTIVE BARRIER BETWEEN STORIES AND BETWEEN A TOP STORY AND A ROOF SPACE. FIRE BLOCKING SHALL BE PROVIDED IN WOOD FRAME CONSTRUCTION

SHEAR WALL:

ALL SHEAR WALLS TO MEET THE REQUIREMENTS OF TABLE 3.4.4.2 OF THE W.F.C.M. AND SHALL HAVE HOLDOWNS AT EACH END WITH A MINIMUM CAPACITY OF:

8' WALL 3488LBS
9' WALL 3924LBS
12' WALL 5232LBS

UP-LIFT CONNECTORS:

ALL CONNECTIONS SHALL TRANSFER UPLIFT LOADS FROM THE ROOF ASSEMBLY TO THE FOUNDATION TO CREATE A COMPLETE LOAD PATH.

ROOF DIAPHRAGM BRACING:

BLOCKING AND CONNECTIONS SHALL BE PROVIDED AT PANEL EDGES PERPENDICULAR TO ROOF FRAMING MEMBERS IN THE FIRST TWO BAYS OF FRAMING AND SHALL BE SPACED NO MORE THAN 4' O.C.

FLOOR DIAPHRAGM BRACING:

FLOOR DIAPHRAGM BRACING REQUIRED AT PANEL EDGES PERPENDICULAR TO FLOOR FRAMING MEMBERS IN THE FIRST TWO BAYS OF FRAMING AND SHALL BE SPACED NO MORE THAN 4' O.C.

PREMISES IDENTIFICATION:

PROPERTY IDENTIFICATION (STREET ADDRESS) MUST BE ATTACHED TO THE FRONT OF THE BUILDING SO THAT IT IS VISIBLE FROM THE STREET.

MINIMUM FOOTING SIZES:

CONVENTIONAL LIGHT FRAME CONSTRUCTION:
ONE STORY 12" FOOTING WIDTH
TWO STORY 15" FOOTING WIDTH
THREE STORY 23" FOOTING WIDTH

4" BRICK VENEER OVER LIGHT FRAME CONSTRUCTION:
ONE STORY 12" FOOTING WIDTH
TWO STORY 21" FOOTING WIDTH
THREE STORY 32" FOOTING WIDTH

UNDERLAYMENT SHALL BE FASTENED W/ CORROSION RESISTANT FASTENERS AS PER MANUFACTURER. FASTENERS ARE TO BE APPLIED ALONG THE OVERLAP NO FURTHER THAN 36" O.C. ANY PITCH BELOW 4/12 SHALL REQUIRE TWO LAYERS OF UNDERLAYMENT. ASPHALT SHINGLES SHALL HAVE A MIN. OF 6 CORROSION RESISTANT FASTENERS PER SHINGLE.

VENTILATION:

THE UNDER FLOOR SPACE BETWEEN THE BOTTOM OF THE FLOOR JOIST AND THE EARTH UNDER ANY BUILDING SHALL BE PROVIDED WITH VENTILATION OPENINGS THROUGH FOUNDATION WALLS OR EXTERIOR WALLS. THE MINIMUM NET AREA OF VENTILATION OPENINGS SHALL NOT BE LESS THAN 1 SQUARE FOOT FOR EACH 150 SQUARE FEET OF UNDER FLOOR SPACE AREA. ONE SUCH VENTILATING OPENING SHALL BE WITHIN 3 FEET OF EACH CORNER.

ROOF VENTILATION:

THE TOTAL NET FREE VENTILATING AREA SHALL NOT BE LESS THAN 1 TO 150 OF THE AREA OF THE SPACE VENTILATED EXCEPT THAT THE TOTAL AREA IS PERMITTED TO BE REDUCED TO 1 TO 300, PROVIDED AT LEAST 50 PERCENT AND NOT MORE THAN 80 PERCENT OF THE REQUIRED VENTILATING AREA IS PROVIDED BY VENTILATORS LOCATED IN THE UPPER PORTION OF THE SPACE TO BE VENTILATED AT LEAST 3 FEET ABOVE EAVE OR CORNICE VENTS WITH THE BALANCE OF THE REQUIRED VENTILATION PROVIDED BY EAVE OR CORNICE VENTS.

ATTIC ACCESS:

ATTIC ACCESS OPENINGS SHALL BE PROVIDED TO ATTIC AREAS THAT EXCEED 30 SQ. FT. AND HAVE A VERTICAL HEIGHT OF 30" OR GREATER.OPENINGS SHALL NOT BE LESS THAN 22" BY 30" AND SHALL BE LOCATED IN A HALLWAY OR OTHER READILY ACCESSIBLE LOCATION.

VINYL SIDING:

VINYL SIDING SHALL MEET THE 130 M.P.H. WINDSPEED REQUIREMENT.

ENCLOSED AREA BELOW DESIGN FLOOD ELEVATION:

ENCLOSED AREAS, INCLUDING CRAWL SPACES, THAT ARE BELOW THE DESIGNED FLOOD ELEVATION SHALL:
BE USED SOLELY FOR PARKING OF VEHICLES, BUILDING ACESS OR STORAGE.
BE PROVIDED WITH FLOOD OPENINGS WHICH SHALL HAVE TWO OPENINGS ON DIFFERENT SIDES OF EACH ENCLOSED AREA.
THE TOTAL NET AREA OF ALL OPENINGS SHALL BE AT LEAST 1 SQUARE INCH FOR EACH SQUARE FOOT.
THE BOTTOM OF EACH OPENING SHALL NOT EXCEED 1 FOOT FROM ADJACENT GROUND LEVEL.

NOTE: CONTRACTOR TO FIELD VERIFY ALL DIMENSIONS

DAMMON ENGINEERING, INC.
LOUISIANA & MISSISSIPPI
Chief Engineer: Brian Mistich, PE
554 Old Spanish Trail
Slidell, LA 70458
www.dammonengineering.com
info@dammonengineering.com
PH: 985.649.5832

#	DESCRIPTION	REVISIONS	DATE

HUGO MARTINEZ
LOT 5, STOKES DRIVE
OAK RANCH ESTATES
SLIDELL, LA 70460

JOB No:
DATE: 10-03-2023
DRAWN BY: CAD
CHECKED BY: BAM

SHEET TITLE:
ROOF & HOUSE ELEVATIONS

DRAWING NUMBER:
A103

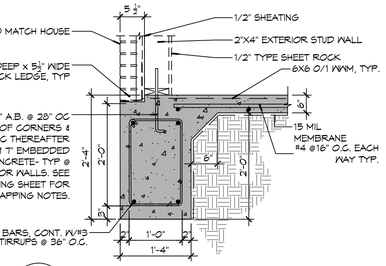

A S101|S101 SECTION
SCALE: 1/2" = 1' - 0" EXTERIOR GRADE BEAM

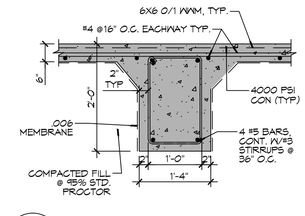

B S101|S101 SECTION
SCALE: 1/2" = 1' - 0" INTERIOR GRADE BEAM

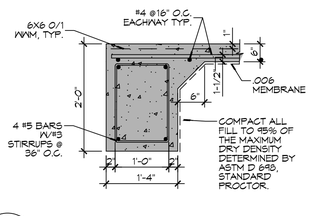

C S101|S101 SECTION
SCALE: 1/2" = 1' - 0" EXTERIOR GRADE BEAM

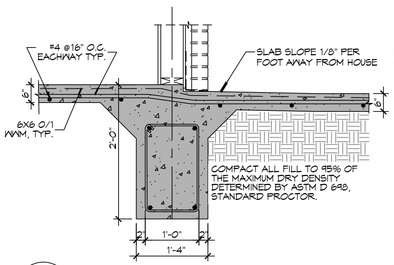

D S101|S101 SECTION
SCALE: 1/2" = 1' - 0" GRADE BEAM PORCH

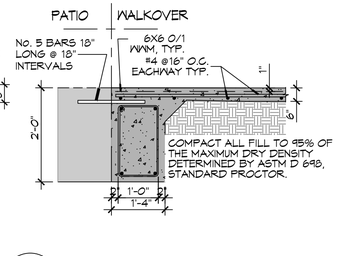

E S101|S101 SECTION
SCALE: 1/2" = 1' - 0" GRADE BEAM WALKOVER

GENERAL FOUNDATION NOTES

1. ALL DIMENSIONS ARE EDGE OF CONCRETE (EOC) TO EDGE OF CONCRETE (EOC) UNLESS NOTED OTHERWISE.
2. VERIFY ALL PLUMBING ROUGH-IN LOCATIONS AND DOUBLE UP ON FLOOR JOIST IN THOSE AREAS.
3. CONCRETE MIX SHALL HAVE A MINIMUM COMPRESSIVE STRENGTH OF 4000 PSI AT 28 DAYS. CONCRETE MIX SHALL BE IN ACCORDANCE WITH ACI-318.
4. ALL CONVENTIONAL REINFORCING STEEL SHALL MEET ASTM-A615 (GRADE 60).
5. ONE LAYER OF POLYETHYLENE VAPOR BARRIER SHALL BE PLACED UNDER ALL CONCRETE. VAPOR RETARDER TO BE MINIMUM 10 MIL, THICKNESS; ASTM E 1745 CLASS A, PERMEANCE LESS THAN 0.01 PERMS, EQUAL TO STEGO INDUSTRIES STEGO WRAP, ECOSHIELD-E 15 MIL BY EPRO, OR IRONBAR 15 BY FLATIRON FILMS. PROVIDE APPROPRIATE ACCESSORIES FOR A COMPLETE SYSTEM.
6. ALL REINFORCING STEEL AND MESH SHALL BE SECURELY SUPPORTED TO PREVENT BOTH VERTICAL AND HORIZONTAL MOVEMENT DURING CONCRETE PLACEMENT.
7. THE CONTRACTOR SHALL VERIFY ALL DROPS, OFFSETS, BRICK LEDGES, DIMENSIONS AND CONFIGURATIONS.
8. GRADE BEAM DIMENSIONS MAY VARY BY -5%, +20%.
9. FILL, AS A MINIMUM QUALITY, SHALL BE 40% CLAY AND 60% SANDY MIXTURE, PLACED IN 6" LIFTS AND COMPACTED TO A MINIMUM OF 95% STANDARD PROCTOR. FOOTINGS ARE DESIGNED TO USE SOIL WITH A BEARING PRESSURE OF 2000 LBS. PER SQUARE FOOT OR MORE. IT IS RECOMMENDED THAT THE OWNER VERIFY ALLOWABLE SOIL BEARING PRESSURE CAPACITY BY CONTRACTING THE SERVICES OF A SOILS ENGINEERING COMPANY.
9. ALL SOIL BELOW SLAB SHALL RECEIVE TERMITE TREATMENT.

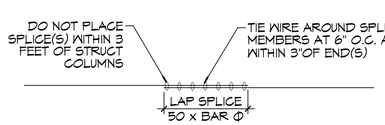

REBAR SPLICE
SCALE: 1/2" = 1' - 0"

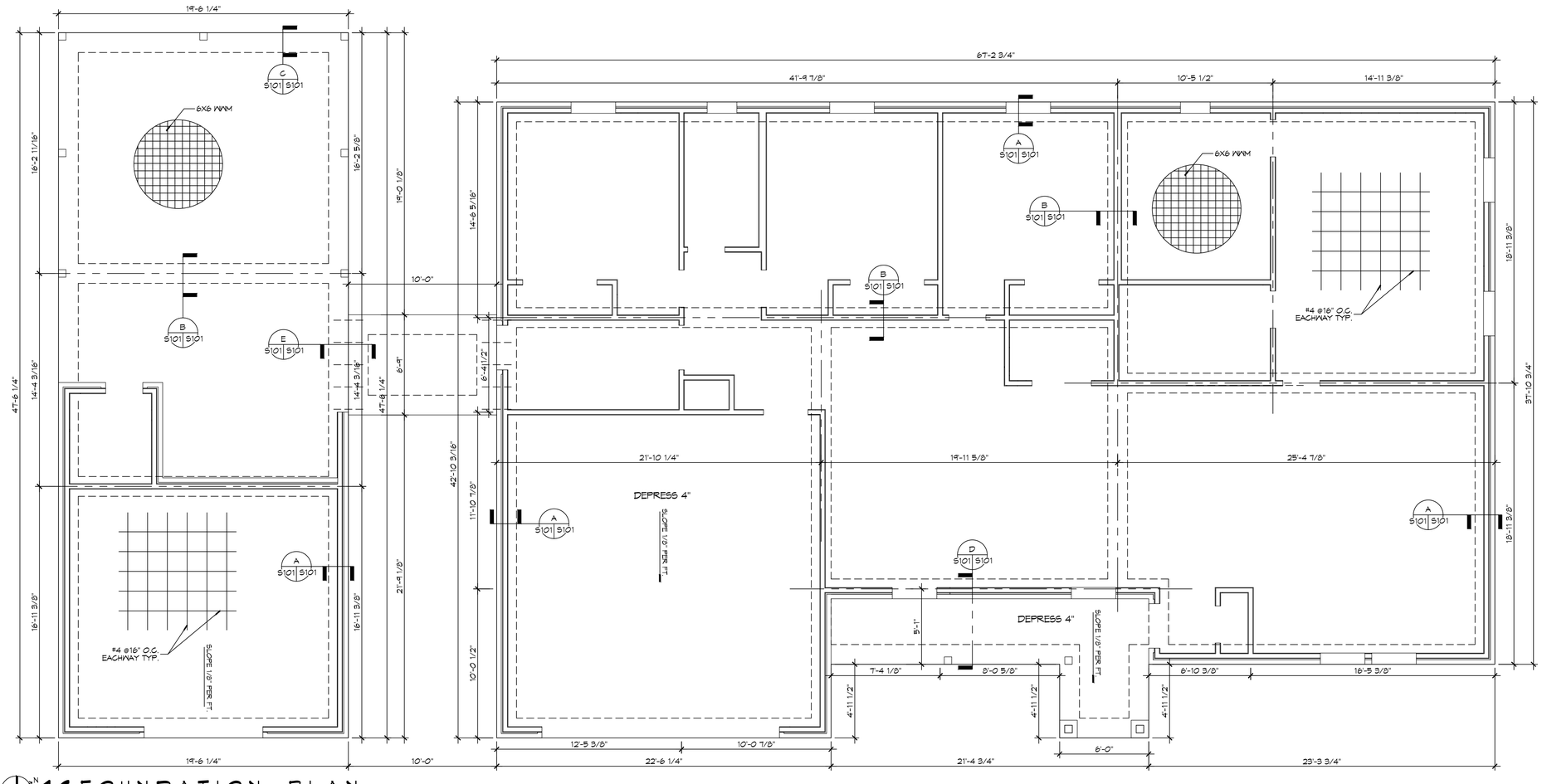

16 FOUNDATION PLAN
SCALE: 1/4" = 1'-0"
FOUNDATION PLAN

DAMMON ENGINEERING, INC.
LOUISIANA & MISSISSIPPI
www.dammonengineering.com
info@dammonengineering.com
PH: 985.649.5821
Chief Engineer: Brian Mistich, PE
554 Old Spanish Trail
Slidell, LA 70458

REVISIONS

#	DESCRIPTION	DATE

STATE OF LOUISIANA
BRIAN A. MISTICH
License No. 30187
PROFESSIONAL ENGINEER

HUGO MARTINEZ
LOT 9, STOKES DRIVE
OAK RANCH ESTATES
SLIDELL, LA 70460

DRAWN BY: BAM
CHECKED BY: CKD
DATE: 10-03-2023
JOB No:

THE CONCEPTS AND DESIGNS SHOWN, AS WELL AS THE DRAWINGS AND SPECIFICATIONS PREPARED AND FURNISHED BY DAMMON ENGINEERING, INC. ARE AND SHALL REMAIN THE PROPERTY OF DAMMON ENGINEERING, INC. THEY ARE NOT TO BE USED IN WHOLE OR IN PART FOR ANY PURPOSE OTHER THAN THE SPECIFIC PROJECT FOR WHICH THEY WERE PREPARED AND DEVELOPED. NO PART OF THESE DRAWINGS AND SPECIFICATIONS SHALL BE COPIED, DISCLOSED TO OTHERS OR USED IN ANY MEDIUM WHATSOEVER WITHOUT THE WRITTEN PERMISSION OF DAMMON ENGINEERING, INC. ANY UNAUTHORIZED USE SHALL BE AT THE SOLE RISK OF THE USER.

SHEET TITLE:
FOUNDATION PLAN

DRAWING NUMBER:
S101

SHEET No: 5 of 6

FILE NAME: J:_Foundations w. Structural Grid\Hugo Martinez, Slidell, LA - Dammon\Current Drawings\S101-Foundation Plan.dwg, PLOT DATE & TIME: Tuesday, October 10, 2023, 1:33:30 PM

FILE NAME: J:\- Foundations or Structural Only\Hugo Martinez Stokes dr Cromer\Current Drawings\S102 -Typical Connection Details-Schedules & Notes.dwg PLOT DATE & TIME: Thursday, October 12, 2023 11:23:21 AM

TABLE S102.7 - HEADER SPANS FOR INTERIOR LOAD-BEARING WALLS

		DROPPED HEADER			RAISED HEADER		
		BUILDING WIDTH (ft)			BUILDING WIDTH (ft)		
		12	24	36	12	24	36
HEADERS SUPPORTING	SIZE	MAXIMUM HEADER SPAN			MAXIMUM HEADER SPAN		
ONE FLOOR ONLY (SINGLE CENTER BEARING WALL)	(2) 2x4	4'-0"	2'-10"	2'-4"	4'-1"	2'-10"	2'-4"
	(2) 2x6	5'-11"	4'-3"	3'-5"	6'-1"	4'-4"	3'-6"
	(2) 2x8	7'-1"	5'-2"	4'-4"	7'-9"	5'-5"	4'-5"
	(2) 2x10	7'-11"	6'-0"	5'-0"	9'-2"	6'-6"	5'-3"
	(2) 2x12	8'-6"	6'-7"	5'-7"	10'-9"	7'-7"	6'-3"
	(3) 2x8	8'-5"	6'-4"	5'-3"	9'-8"	6'-10"	5'-7"
	(3) 2x10	9'-3"	7'-1"9'-10"	6'-0"	11'-5"	8'-1"	6'-7"
	(3) 2x12	9'-11"	7'-8"	6'-7"	13'-6"	9'-6"	7'-9"
	(4) 2x8	9'-5"	7'-2"	6'-0"	11'-2"	7'-11"	6'-5"
	(4) 2x10	10'-3"	7'-11"	6'-9"	13'-3"	9'-4"	7'-8"
	(4) 2x12	11'-0"	8'-7"	7'-4"	15'-7"	11'-0"	9'-0"

TABLE S102.8 - HEADER SPANS FOR EXTERIOR LOAD-BEARING WALLS RESISTING WIND LOADS EXP "B"

SIZE	120 MPH	130 MPH	140 MPH	150 MPH	160 MPH	170 MPH	180 MPH	195 MPH
(2) 2x4	5'-1"	4'-8"	4'-4"	4'-1"	3'-10"	3'-7"	3'-5"	3'-2"
(2) 2x6	6'-3"	5'-9"	5'-4"	5'-0"	4'-8"	4'-5"	4'-2"	3'-10"
(2) 2x8	6'-10"	6'-4"	5'-11"	5'-6"	5'-2"	4'-10"	4'-7"	4'-3"
(2) 2x10	7'-4"	6'-10"	6'-4"	5'-11"	5'-6"	5'-2"	4'-11"	4'-6"
(2) 2x12	7'-10"	7'-3"	6'-9"	6'-3"	5'-11"	5'-7"	5'-3"	4'-10"
(3) 2x8	8'-5"	7'-9"	7'-2"	6'-9"	6'-4"	5'-11"	5'-7"	5'-2"
(3) 2x10	9'-0"	8'-4"	7'-9"	7'-3"	6'-9"	6'-4"	6'-0"	5'-7"
(3) 2x12	9'-7"	8'-11"	8'-3"	7'-8"	7'-3"	6'-10"	6'-5"	5'-11"
(4) 2x8	9'-8"	9'-0"	8'-4"	7'-9"	7'-3"	6'-10"	6'-6"	6'-0"
(4) 2x10	10'-5"	9'-7"	8'-11"	8'-4"	7'-10"	7'-4"	6'-11"	6'-5"
(4) 2x12	11'-7"	11'-1"	10'-3"	9'-6"	8'-11"	8'-4"	7'-10"	6'-10"

TABLE S102.9 - SILL OR BOTTOM PLATE TO FOUNDATION CONNECTIONS RESISTING UPLIFT LOADS - 130 MPH WIND EXP "B"

BOTTOM PLATE TO FOUNDATION ANCHOR BOLT CONNECTION RESISTING	FOUNDATION SUPPORTING	MAXIMUM ANCHOR BOLT SPACING (INCHES)	
		8' END ZONES	INTERIOR ZONES
UPLIFT LOADS	1 - 3 STORIES	50 INCHES ON CENTER	58 INCHES ON CENTER

NOTE: A MINIMUM OF ONE ANCHOR BOLT SHALL BE PROVIDED WITHIN 6 TO 12 INCHES OF EACH END OF EACH PLATE

TABLE S102.10 - BOTTOM PLATE TO FOUNDATION CONNECTIONS (ANCHOR BOLTS) RESISTING LATERAL & SHEAR LOADS - EXP "B"

BOTTOM PLATE TO FOUNDATION ANCHOR BOLT CONNECTION RESISTING	FOUNDATION SUPPORTING	MAXIMUM ANCHOR BOLT SPACING (INCHES)	
		1/2" Φ ANCHOR BOLTS	5/8" Φ ANCHOR BOLTS
UPLIFT LOADS	1 STORY	31 INCHES ON CENTER	48 INCHES ON CENTER

TABLE S102.11 - FULL HEIGHT STUD REQUIREMENT FOR HEADERS OR WINDOW SILL PLATES IN EXTERIOR WALLS EXP "B"

	WALL STUD SPACING (INCHES)		
	12" O.C.	16" O.C.	24" O.C.
HEADER SPAN (FEET)	NUMBER OF FULL HEIGHT STUD REQUIRED AT EACH END OF THE HEADER		
2	1	1	1
4	2	2	1
6	3	3	2
8	4	3	2
10	5	4	3
12	6	5	3
14	7	6	4
16	8	6	4

TABLE S102.5 - JACK STUD REQ - INT LOADBEARING WALLS

HEADER SUPPORTING	HEADER SPAN (FT)	ROOF SPAN (FEET)											
		12 FEET				24 FEET				36 FEET			
		HEADER WIDTH											
		3"	4.5"	5"	6"	3"	4.5"	5"	6"	3"	4.5"	5"	6"
		NUMBER OF JACK STUDS REQUIRED AT EACH END OF THE HEADER											
ONE FLOOR ONLY (CENTER BEARING)	2	1	1	1	1	1	1	1	1	1	1	1	1
	4	1	1	1	1	1	1	1	1	1	1	1	1
	6	1	1	1	1	1	1	1	1	2	1	1	1
	8	1	1	1	1	2	1	1	1	2	2	2	1
	10	1	1	1	1	2	2	1	1	3	2	2	2
	12	1	1	1	1	2	2	2	1	3	2	2	2
	14	2	1	1	1	3	2	2	2	4	3	3	2
	16	2	1	1	1	3	2	2	2	4	3	3	2
TWO FLOORS (CENTER BEARING)	2	1	1	1	1	1	1	1	1	2	1	1	1
	4	1	1	1	1	2	1	1	1	3	2	2	2
	6	2	1	1	1	3	2	2	2	4	3	2	2
	8	2	2	1	1	3	2	2	2	5	3	3	3
	10	2	2	2	1	4	3	3	2	6	4	4	3
	12	3	2	2	2	5	3	3	3	7	5	4	4
	14	3	2	2	2	6	4	4	3	8	5	5	4
	16	4	3	2	2	6	4	4	3	9	6	6	5

HEADER WIDTH - 3" (2-2x), 4.5" (3-2x), 5", 6.5" (4-2x) EACH W/ 1/2" PLYWOOD SPACER BETWEEN

TABLE S102.6 - JACK STUD REQ - EXTERIOR LOADBEARING WALLS

HEADER SUPPORTING	HEADER SPAN (FT)	ROOF LIVE LOAD 20 PSF				GROUND SNOW LOAD 30 PSF			
		3"	4.5"	5"	6"	3"	4.5"	5"	6"
		NUMBER OF JACK STUDS REQUIRED							
ROOF AND CEILING	2	1	1	1	1	1	1	1	1
	4	1	1	1	1	1	1	1	1
	6	2	1	1	1	2	1	1	1
	8	2	2	2	1	2	2	2	1
	10	3	2	2	2	3	2	2	2
	12	3	2	2	2	3	2	2	2
	14	4	3	2	2	4	3	2	2
	16	4	3	3	2	4	3	3	2
ROOF, CEILING, AND ONE CENTER BEARING FLOOR	2	1	1	1	1	1	1	1	1
	4	2	1	1	1	2	1	1	1
	6	2	2	2	1	3	2	2	2
	8	3	2	2	2	3	2	2	2
	10	4	3	2	2	4	3	3	2
	12	4	3	3	2	5	3	3	3
	14	5	4	3	3	5	4	3	3
	16	6	4	4	3	6	4	4	3

HEADER WIDTH - 3" (2-2x), 4.5" (3-2x), 5", 6" (4-2x) EACH W/ 1/2" PLYWOOD SPACER BETWEEN

TABLE S102.3 -NAILING SCHEDULE

DESCRIPTION	NUMBER OF COMMON NAILS	NUMBER OF BOX NAILS	SPACING
WALL FRAMING			
TOP PLATE TO TOP PLATE (FACE NAILED)	2-16d	2-16d	PER FOOT
TOP PLATE AT INTERSECTION (FACE)	4-16d	5-16d	JOINTS - EACH SIDE
STUD TO STUD (FACE-NAILED)	2-16d	2-16d	24" o.c.
HEADER TO HEADER (FACE NAILED)	16d	16d	16" o.c. EDGES
TOP OR BOTTOM PLATE TO STUD (END)	SEE TABLE	SEE TABLE	PER STUD
BOTTOM PLATE TO FLOOR JOIST, BANDJOIST, END JOIST OR BLOCKING	2-16d	2-16d	PER FOOT
ROOF SHEATHING			
WOOD STRUCTURAL PANELS	8d	10d	SEE TABLE S102.1
DIAGONAL BOARD SHEATHING			
1"x6" OR 1"x8"	2-8d	2-10d	PER SUPPORT
1"x10" OR WIDER	3-8d	3-10d	PER SUPPORT

TABLE S102.4 - BUILDING ENVELOPE REQUIREMENTS

OPAQUE ELEMENTS		ASSEMBLY MAXIMUM	INSULATION MIN. R-VALUE
ROOFS	INSULATION ENTIRELY ABOVE DECK	U-0.048	R-20.0 c.i.
	METAL BUILDING	U-0.065	R-19
	ATTIC AND OTHER	U-0.027	R-38
WALLS, ABOVE GRADE	MASS	U-0.151 @	R-5.7 c.i. @
	METAL BUILDING	U-0.113	R-13.0
	STEEL-FRAMED	U-0.124	R-13.0
	WOOD-FRAMED AND OTHER	U-0.089	R-13.0
FLOORS	MASS	U-0.107	R6-3 c.i.
	STEEL JOIST	U-0.052	R-19.0
	WOOD FRAMED AND OTHER	U-0.051	R-19.0
SLAB-ON-GRADE	UN-HEATED	F-0.730	NR
OPAQUE DOORS	SWINGING	U-0.700	NR
	NON-SWINGING	U-1.450	NR

c.i. = CONTINUOUS INSULATION; NR = NO INSULATION REQUIREMENT
@ = EXCEPTION APPLIES

ROOF UNDERLAYMENT NOTES

1. FOR ROOF SLOPES FROM TWO UNITS VERTICAL IN 12 UNITS HORIZONTAL (17-PERCENT SLOPE), UP TO FOUR UNITS VERTICAL IN 12 UNITS HORIZONTAL (33-PERCENT SLOPE), UNDERLAYMENT SHALL BE TWO LAYERS APPLIED IN THE FOLLOWING MANNER:
   a. APPLY A 19 INCH STRIP OF UNDERLAYMENT FELT PARALLEL WITH AND STARTING AT THE EAVES, FASTENED SUFFICIENTLY TO HOLD IN PLACE. STARTING AT THE EAVE, APPLY 36 INCH WIDE SHEETS OF UNDERLAYMENT, OVERLAPPING SUCCESSIVE SHEETS 19 INCHES, AND FASTENED SUFFICIENTLY TO HOLD IN PLACE.
2. FOR ROOF SLOPES OF FOUR UNITS VERTICAL IN 12 UNITS HORIZONTAL (33-PERCENT SLOPE) OR GREATER, UNDERLAYMENT SHALL BE ONE LAYER APPLIED IN THE FOLLOWING MANNER:
   a. UNDERLAYMENT SHALL BE APPLIED SHINGLE FASHION, PARALLEL TO AND STARTING FROM THE EAVE AND LAPPED 2 INCHES, FASTENED SUFFICIENTLY TO HOLD IN PLACE. END LAPS SHALL BE OFFSET BY 6 FEET. SHALL HAVE TWO LAYERS OF UNDERLAYMENT.

SHINGLE APPLICATION & FASTENING NOTES

1. ASPHALT STRIP SHINGLES SHALL HAVE A MINIMUM OF SIX FASTENERS PER SHINGLE WHERE THE ROOF IS IN ONE OF THE FOLLOWING CATEGORIES:
   a. THE BASIC WIND SPEED IS 110 MPH OR GREATER AND THE EAVE IS 20 FEET OR HIGHER ABOVE GRADE.
   b. THE BASIC WIND SPEED IS 120 MPH OR GREATER.
   c. SPECIAL WIND ZONES.

GENERAL UPLIFT CONNECTION NOTES

ROOF ASSEMBLY TO WALL ASSEMBLY:
UPLIFT CONNECTIONS SHALL BE FROM RAFTER OR TRUSS TO WALL STUD. WHEN RAFTERS OR TRUSSES ARE NOT LOCATED DIRECTLY ABOVE STUDS, RAFTERS SHALL BE ATTACHED TO THE WALL PLATE AND THE WALL TOP PLATE SHALL BE ATTACHED TO THE WALL STUD WITH UPLIFT CONNECTIONS. UPLIFT CONNECTIONS SHALL BE IN ACCORDANCE WITH TABLE S102.10.

WALL ASSEMBLY TO WALL ASSEMBLY:
STORY TO STORY UPLIFT CONNECTIONS FROM UPPER STORY WALL STUD TO LOWER STORY WALL STUD. WHEN UPPER STORY WALL STUDS ARE NOT LOCATED DIRECTLY ABOVE LOWER WALL STUDS, THE STUDS SHALL BE ATTACHED TO A COMMON MEMBER IN THE FLOOR ASSEMBLY BY UPLIFT CONNECTIONS. UPLIFT CONNECTIONS SHALL BE IN ACCORDANCE WITH TABLE S102.11.

WALL ASSEMBLY TO FOUNDATION:
FIRST FLOOR WALL STUDS SHALL BE CONNECTED TO THE FOUNDATION, SILL, PLATE, OR BOTTOM PLATE. A MINIMUM OF A 1-1/4" x 20 GA. ASTM A653 GRADE 33 STEEL STRAP SHALL BE NAILED TO THE WALL STUDS AND HAVE A MINIMUM EMBEDMENT OF 7 INCHES IN CONCRETE FOUNDATIONS AND SLABS-ON-GRADE, 15 INCHES IN MASONRY BLOCK FOUNDATIONS, OR BE LAPPED UNDER THE BOTTOM PLATE, 3 INCH SQUARE WASHERS SHALL BE USED ON THE ANCHOR BOLTS AND ANCHOR BOLT SPACINGS SHALL NOT EXCEED THE REQUIREMENTS. STEEL STRAPS EMBEDDED IN OR IN CONTACT WITH SLAB-ON-GRADE OR MASONRY BLOCK FOUNDATIONS SHALL BE HOT-DIPPED GALV. AFTER FABRICATION, OR MANUF. FROM G185 OR Z450 GALV. STL. CONNECTIONS SHALL BE IN ACCORDANCE WITH TABLE S102.12.

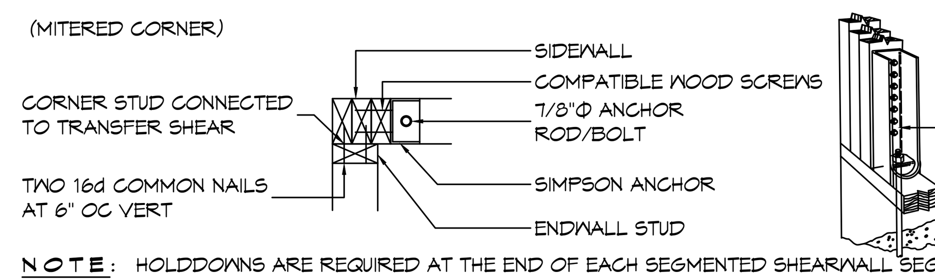

NOTE: HOLDDOWNS ARE REQUIRED AT THE END OF EACH SEGMENTED SHEARWALL SEGMENT OR AT THE EACH END OF A PERFORATED SHEARWALL. WHEN FULL HEIGHT SHEARWALL SEGMENTS MEET AT A CORNER, A SINGLE HOLDDOWN SHALL BE PERMITTED TO BE USED TO RESIST THE OVERTURNING FORCES IN BOTH DIRECTIONS WHEN THE CORNER FRAMING IN THE ADJOINING WALLS IS FASTENED TOGETHER TO TRANSFER THE UPLIFT LOAD.

(F) CORNER HOLDDOWN

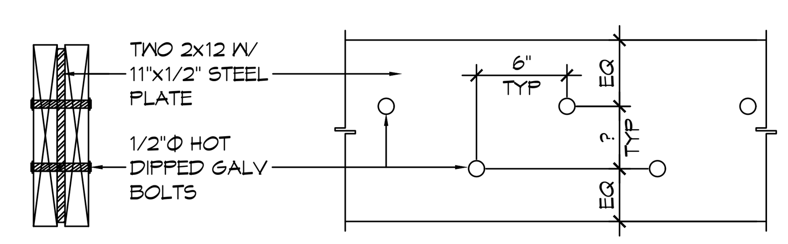

(N) FLITCH BEAM

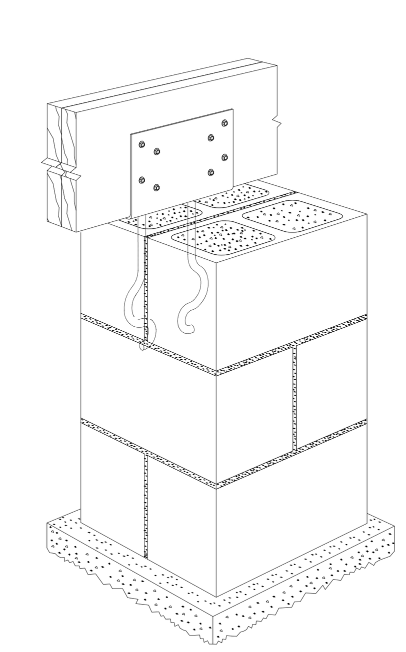

(J) SIMPSON CCQM

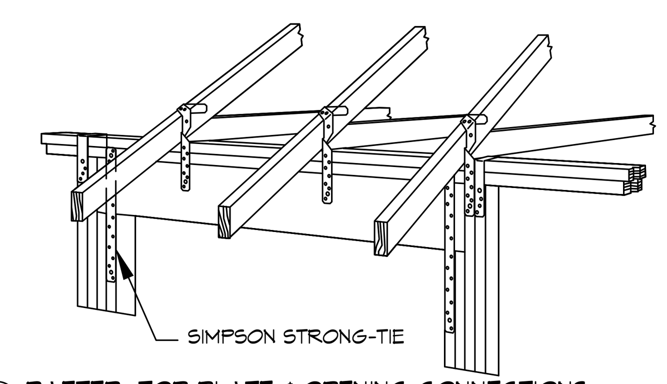

(M) RAFTER, TOP PLATE & OPENING CONNECTIONS

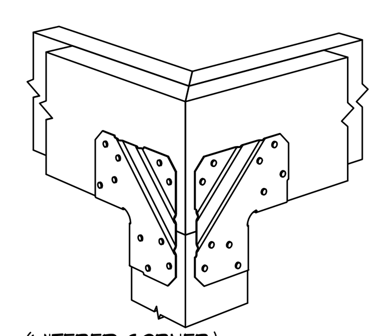

(L) POST TO BEAM

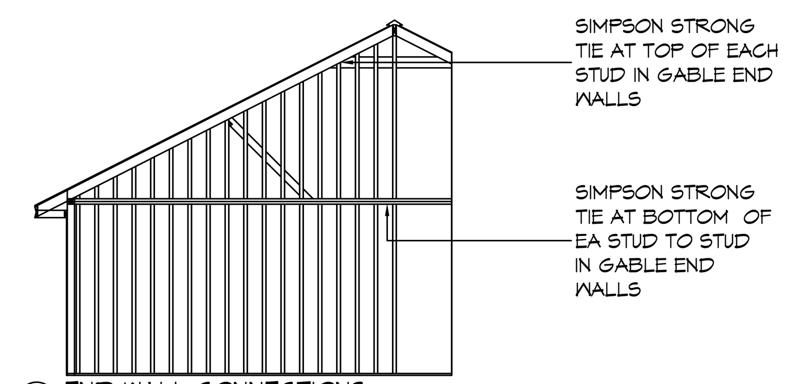

(K) END WALL CONNECTIONS

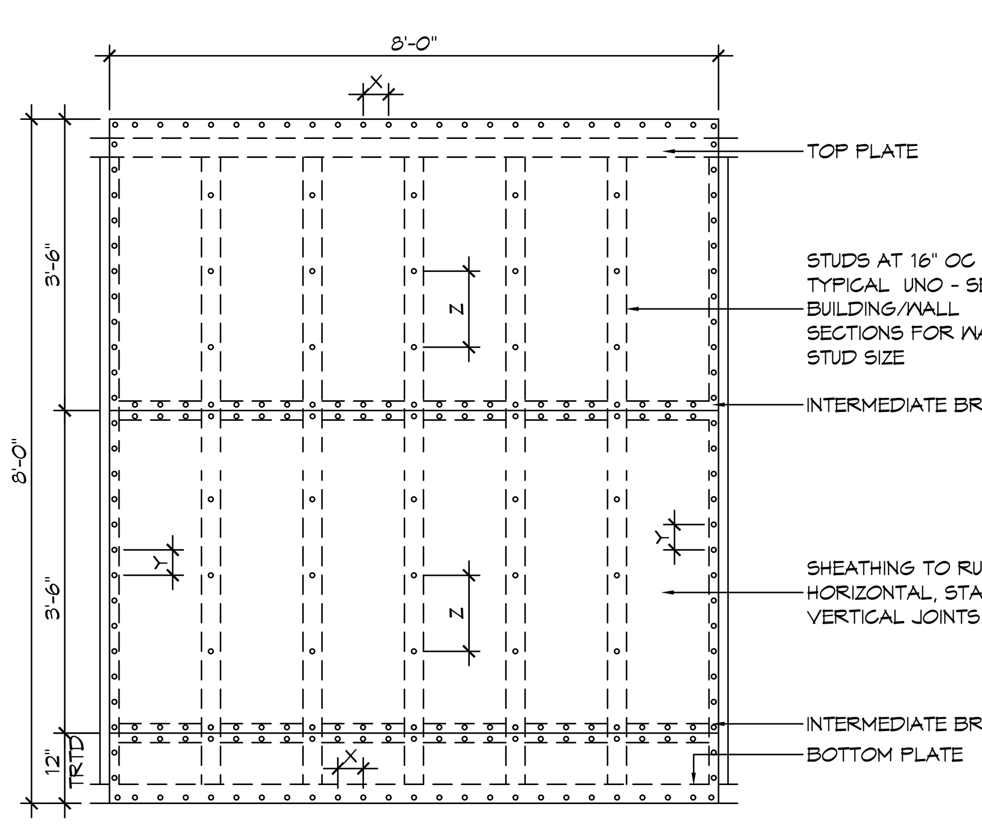

NAIL SPACING
X = 4" OC
Y = 4" OC
Z = 12" OC

X = PLATE EDGE NAIL SPACING
Y = LONG EDGE NAIL SPACING
Z = FIELD NAIL SPACING

(H) SHEAR WALL EXTERIOR SHEATHING NAILING PATTERN

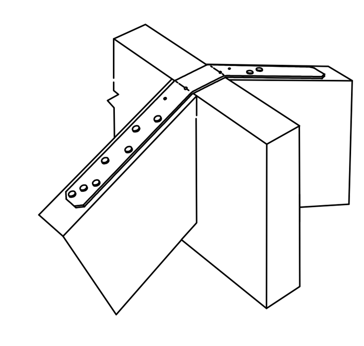

SIMPSON STRONG-TIE

AT ALL RIDGE CONNECTIONS

(G) RIDGE BEAM/BOARD

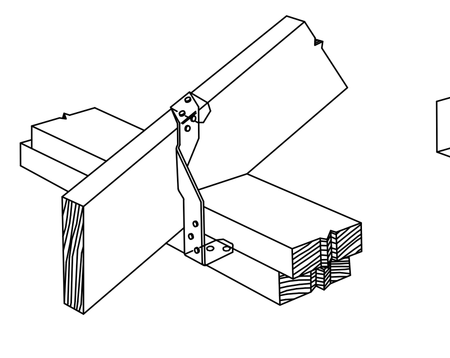

SIMPSON STRONG-TIE

(F) TOP PLATE TO RAFTER

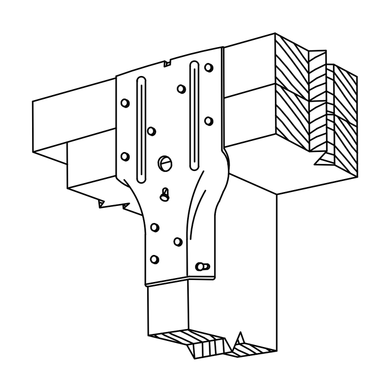

SIMPSON STRONG-TIE

(E) STUD TO TOP PLATE

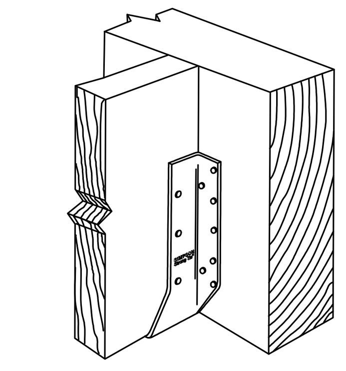

SIMPSON STRONG-TIE

(D) FLOOR JOIST

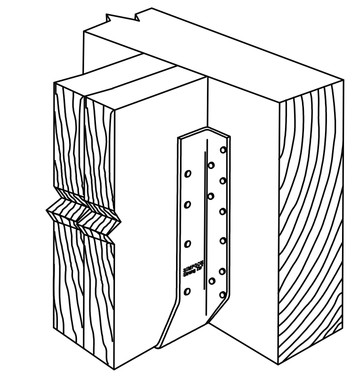

SIMPSON STRONG-TIE

(C) DBL FLOOR JOIST

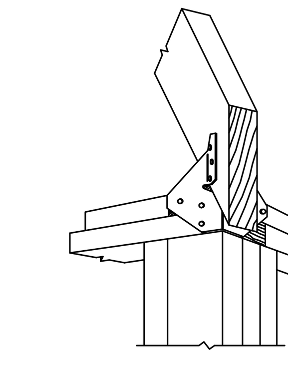

SIMPSON STRONG-TIE

(B) HIP RAFTER

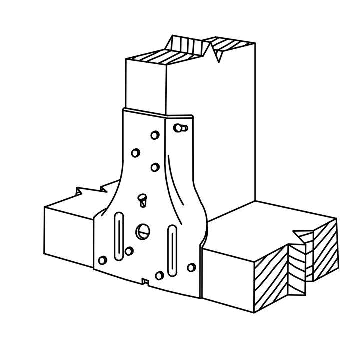

SIMPSON STRONG-TIE

(A) STUD TO SILL PLATE

TYPICAL CONNECTION DETAILS

SCALE: NTS

17

TABLE S102.1 - ROOF SHEATHING OR CLADDING REQUIREMENT - 140 MPH WIND LOAD EXP "B"

SHEATHING LOCATION	RAFTER / TRUSS SPACING	E	F
		MAX NAIL SPACING FOR 8d COMMON NAILS OR 10d BOX NAILS (INCHES OC)	
INTERIOR ZONE	12" OC	6	12
	16" OC	6	12
	24" OC	6	12
PERIMETER EDGE ZONE	12" OC	6	12
	16" OC	6	12
	24" OC	6	6

110 MPH WIND - EXPOSURE "C" TYPICAL
E = NAIL SPACING AT PANEL EDGES, INCHES.
F = NAIL SPACING AT INTERMEDIATE SUPPORTS IN THE PANEL FIELD, INCHES.

TABLE S102.2 - WALL SHEATHING OR CLADDING REQUIREMENT - 140 MPH WIND LOAD EXP "B"

SHEATHING LOCATION	STUD SPACING	E	F
		MAX NAIL SPACING FOR 8d COMMON NAILS OR 10d BOX NAILS (INCHES OC)	
INTERIOR ZONE	12" OC	6	12
	16" OC	6	12
	24" OC	6	12
PERIMETER EDGE ZONE	12" OC	6	12
	16" OC	6	12
	24" OC	6	12

140 MPH WIND - EXPOSURE "B" TYPICAL
E = NAIL SPACING AT PANEL EDGES, INCHES.
F = NAIL SPACING AT INTERMEDIATE SUPPORTS IN THE PANEL FIELD, INCHES.

DESIGN CRITERIA

THE CONSTRUCTION FOR SAID RESIDENCE, WHERE BASIC WIND SPEED IS 140 MILES PER HOUR, WIND EXPOSURE ZONE B, IS DESIGNED IN ACCORDANCE WITH: AMERICAN FOREST AND PAPER ASSOCIATION (AF&PA) WOOD FRAME CONSTRUCTION MANUAL FOR ONE AND TWO FAMILY DWELLINGS (WFCM) 2001 EDITION AS WELL AS THE INTERNATIONAL RESIDENTIAL CODE (IRC) 2021 EDITION

DAMMON ENGINEERING, INC.
LOUISIANA & MISSISSIPPI
www.dammonengineering.com
info@dammonengineering.com
PH: 985.649.5832
Chief Engineer: Brian Mistich, PE
554 Old Spanish Trail
Slidell, LA 70458

REVISIONS		
#	DESCRIPTION	DATE

HUGO MARTINEZ
LOT 3, STOKES DRIVE
OAK RANCH ESTATES
SLIDELL, LA. 70460

JOB No:
DATE: 10-03-2023
DRAWN BY: CKD
CHECKED BY: BAM

The above drawings and specifications, designs and arrangements represented thereby are and shall remain the property of Dammon Engineering, and no part thereof shall be copied, disclosed to others, or used in connection with any work or project other than the specific project for which the have been prepared and developed without written consent of Dammon Engineering. Visual contact with these drawings or specifications shall constitute conclusive evidence of acceptance of these restrictions.

SHEET TITLE:
TYPICAL CONNECTION DETAILS, SCHEDULES, AND NOTES

DRAWING NUMBER:
S102