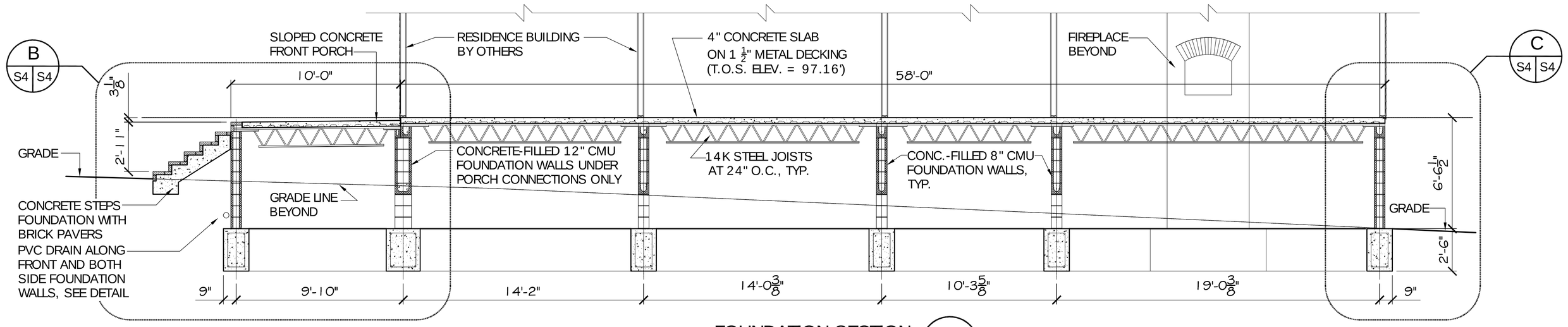

FOUNDATION SECTION A (S1 S4)
SCALE: 1/4"= 1'

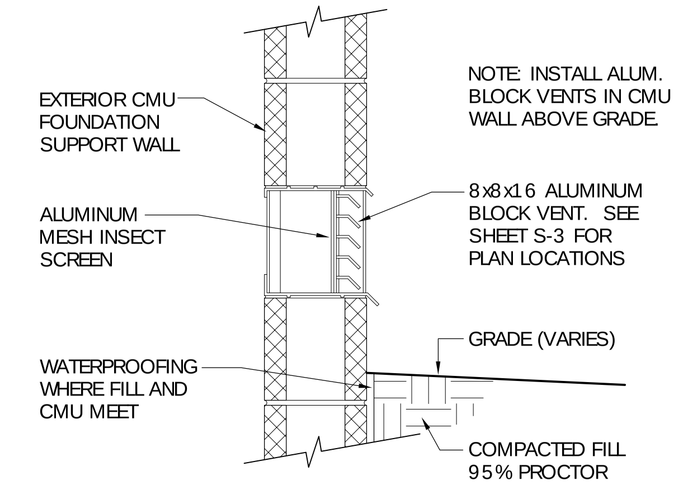

BLOCK VENTILATION DETAIL
SCALE: 1 1/2"= 1'-0"

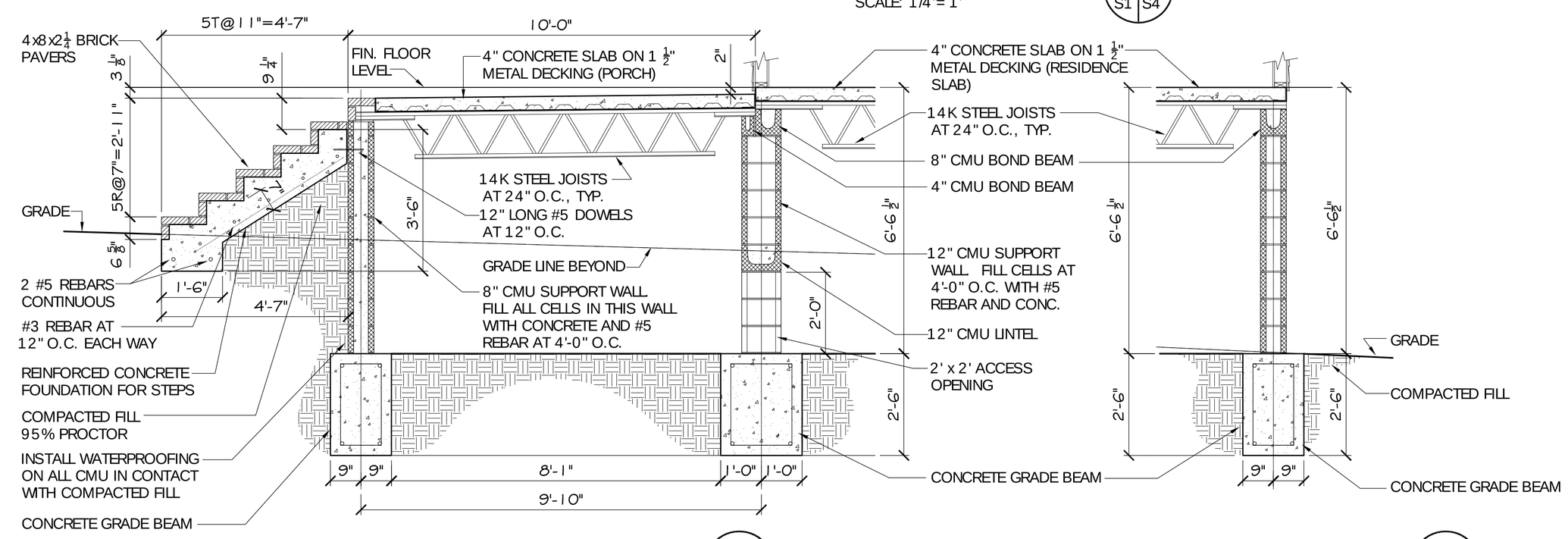

FRONT PORCH SECTION B (S4 S4)
SCALE: 1/2"= 1'

REAR WALL SUPPORT SECTION C (S4 S4)
SCALE: 1/2"= 1'

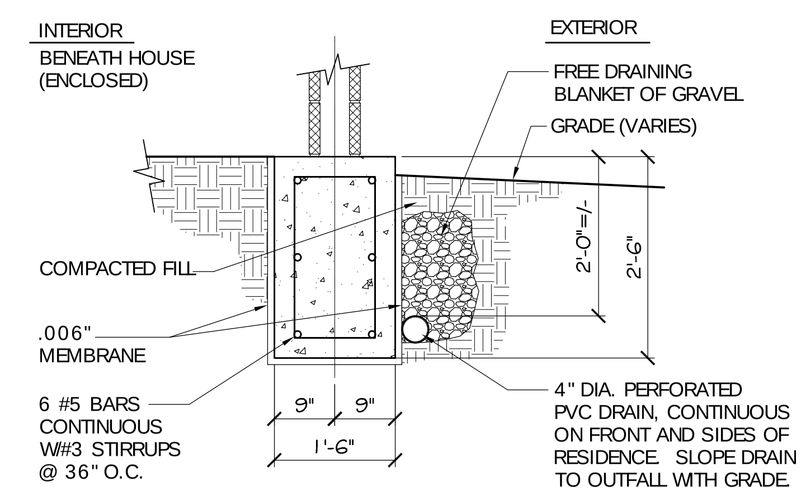

DRAINAGE DETAIL
SCALE: 3/4"= 1'-0"

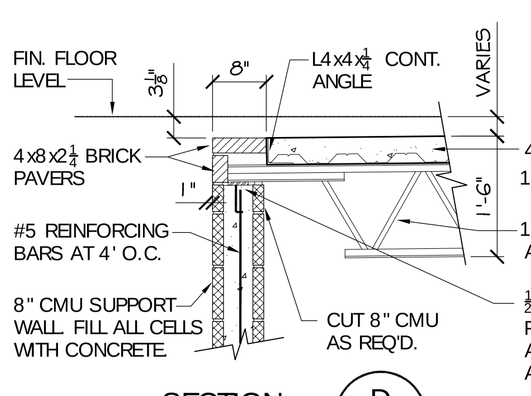

SECTION D (S4 S4)
SCALE: 3/4"= 1'-0"

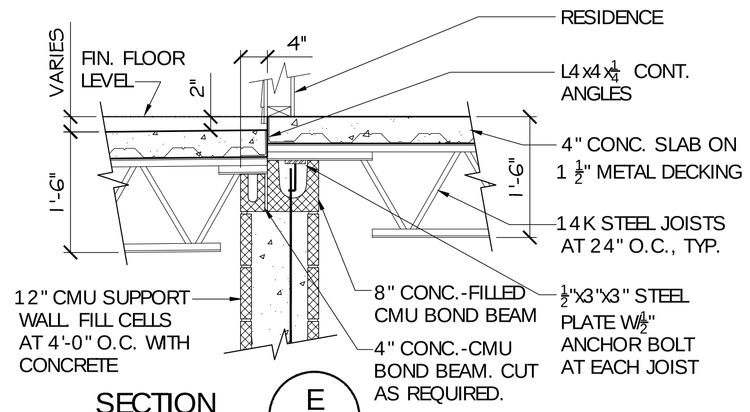

SECTION E (S4 S4)
SCALE: 3/4"= 1'-0"

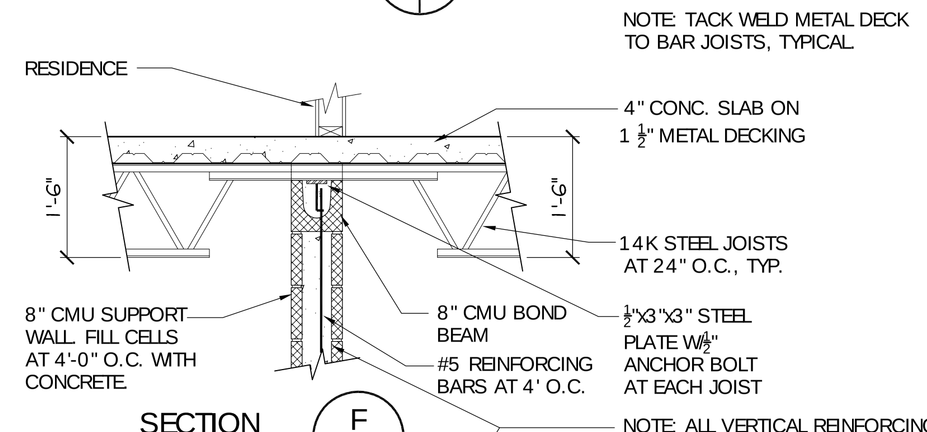

SECTION F (S4 S4)
SCALE: 3/4"= 1'-0"

NOTE: ALL VERTICAL REINFORCING BARS TO HAVE A 3" BEND AT BOTH TOP AND BOTTOM

NOT USED

SECTION G (S4 S4)
SCALE: 3/4"= 1'-0"

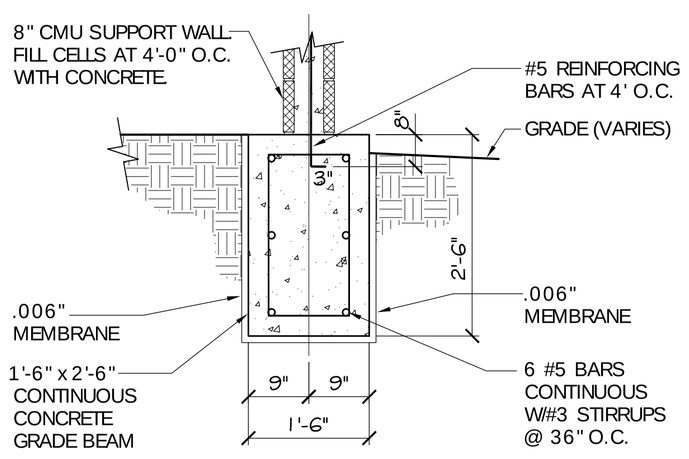

SECTION H (S4 S4)
SCALE: 3/4"= 1'-0"

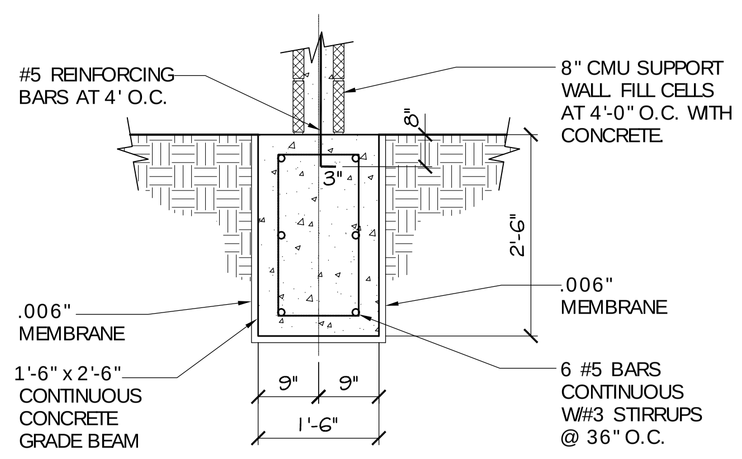

SECTION J (S4 S4)
SCALE: 3/4"= 1'-0"

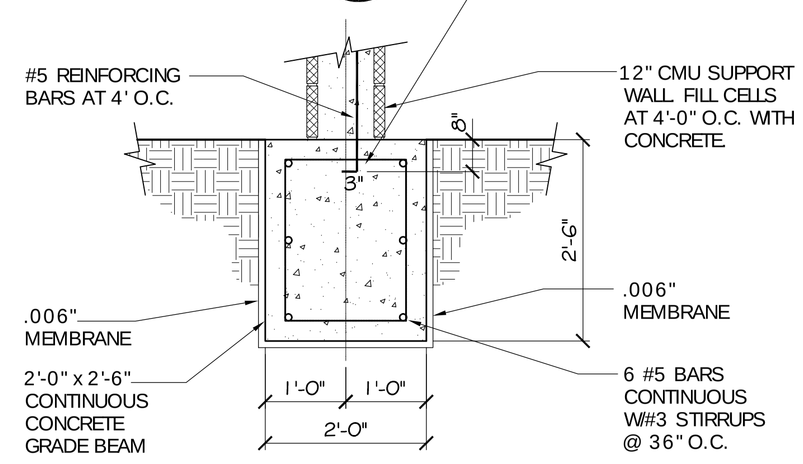

SECTION K (S4 S4)
SCALE: 3/4"= 1'-0"

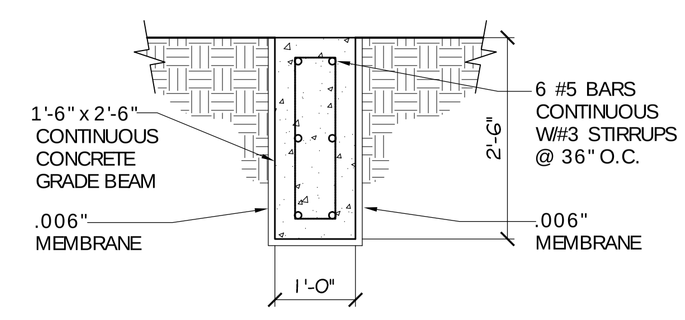

SECTION L (S4 S4)
SCALE: 3/4"= 1'-0"

DAMMON ENGINEERING, INC.

CHIEF ENGINEER
EMMETT DAMMON, P.E.

CHIEF ARCHITECT
ROBERT WILTSE

1095 FLORIDA AVENUE
SLIDELL, LA. 70458
OFFICE: 985-649-5832
FAX: 985-641-5950

WEBSITE:
WWW.DAMMONENGINEERING.COM

EMAIL:
DAMMONENG@BELLSOUTH.NET

ARCHITECTURE
ENGINEERING
STUDIES
PLANNING
INVESTIGATION
EXPERT WITNESS

STRAIN RESIDENCE
LOT 31
NEW ARBOR LAKES
POPLARVILLE, MS

FOUNDATION SECTIONS AND DETAILS

REV: 10-02-08
SCALE: AS NOTED
JOB#: 1990
DATE: 09-22-08
SHEET
S-4
OF