1.) CABINET CONFIGURATION MAY VARY TO CABINET STYLE SELECTED

2.) MIN. 30" CLEARENCE BETWEEN RANGE AND COMBUSTIBLE SURFACE ABOVE

3.) MIN. 1" CLEARENCE FROM RANGE EXHAUST VENT TO COMBUSTIBLE MATERIAL

4.) DUCTLESS RANGE HOOD

INLAW SUITE

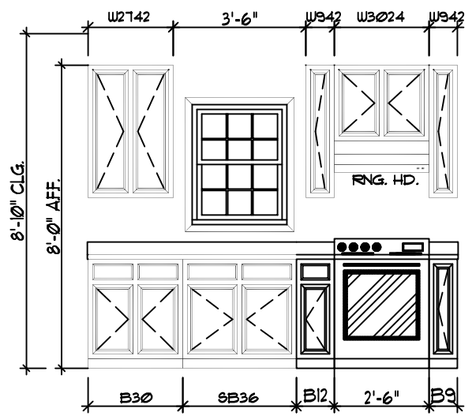

KITCHEN CABINET DETAILS

BATH-3

BATH CABINET DETAILS

TRAP SIZE	FALL PER FOOT	DISTANCE TO VENT FROM TRAP
1.1/4"	1/4"	3 Ft. 6 In.
1.1/2"	1/4"	5 Ft. 0 In.
2"	1/4"	6 Ft. 0 In.
3"	1/4"	10 Ft. 0 In.
4"	1/8"	12 Ft. 0 In.

ALL FACTORY INSTALLED PLUMBING TO CONFORM TO: CURRENT PLUMBING CODE (SEE COVER SHEET)

REFER TO PLUMBING NOTES ON COVER SHEET FOR ADDITIONAL INFORMATION

NOTE: COMPLETION OF UPPER LEVEL PLUMBING BY THE PURCHASER PER STATE AND LOCAL CODES AND SUBJECT TO INSPECTION BY LOCAL JURISDICTION

NOTE: APPROVED ENGINEERED MECHANICAL WATER HAMMER ARRESTERS FOR QUICK CLOSING VALUES FACT. INST. AT ICEMAKER, DISHWASHER & WASHING MACHINE AS REQUIRED BY CURRENT STATE PLUMBING CODES.

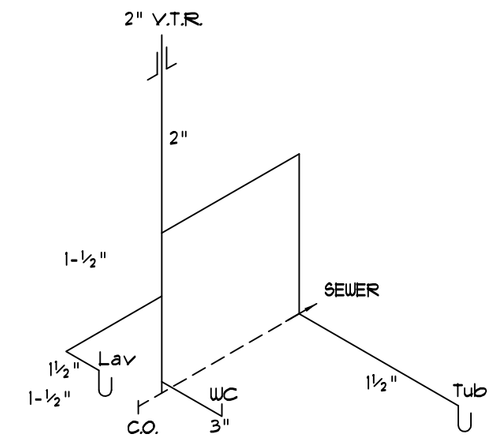

BATH-3

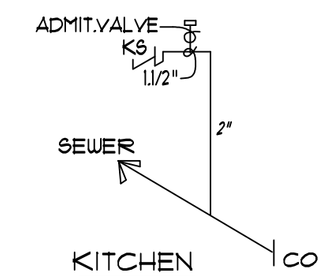

KITCHEN

PEX PLUMB. PLUMBING SCHEMATIC

AMP	WIRE SIZE		PANEL SCHEDULE				AMP	WIRE SIZE
			200 AMP MAIN BREAKER			CONNECTION TO SERVICE BY OTHERS		
20	12/2		GENERAL WIRING	1	2	SMALL APPLIANCE	20	12/2
20	12/2	AFCI	BED-4/GEN. WIRING	3	4	SMALL APPLIANCE	20	12/2
20	12/2		GENERAL WIRING	5	6			
20	12/3	AFCI	SMOKE DECTECTOR	7	8			
25	10/2	240V	WATER HEATER	9	10	RANGE	40	8/3CU
25	10/2	240V	WATER HEATER	11	12	RANGE	40	8/3CU
				13	14	GARAGE	20	12/2
				15	16			
				17	18			
				19	20			
				21	22			
				23	24			
				25	26			
				27	28			
				29	30			
				31	32			
				33	34			
				35	36			
				37	38			
				39	40			

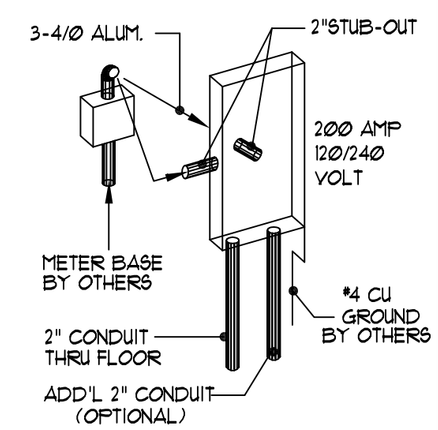

TYP. SERVICE ENTRY INSTALLATION

1) 2" RACEWAY STUBBED TO EXTERIOR FROM REAR (OR SIDE) OF ELEC. PANEL. NOTIFY NWH IF PREP FOR UNDERGROUND SERVICE IS DESIRED.

2) 1 EA. 2" CONDUIT DROPPED THRU FLOOR FOR SITE ELECTRICAL INSTALLATION BY OTHERS.

3) METER BASE BY OTHERS TO BE LOCATED WITHIN 30" OF ELEC. PANEL STUB-OUT.

4) CHECK LOCAL CODE & POWER CO. REQUIREMENTS FOR ANY ADDITIONAL SITE RELATED INSTALLATION.

©COPYRIGHT 1999 NATIONWIDE HOMES,INC.
ALL RIGHTS RESERVED
P.O. BOX 5511 MARTINSVILLE, VA. 24115
1100 RIVES ROAD, MARTINSVILLE, VA. 24115
(540) 632-7100
FAX (540) 632-1181

NATIONWIDE HOMES™

Web Site : www. nationwide-homes. com

PLAN NAME: BLUE RIDGE - PLAN #2			PURCHASER:		PAGE NO.
SERIES: SILVER			JOB NO.	CONTRACT NO.:	
DESIGN DATE:	DWG.BY:	CK.BY:	PROCESS DATE:	DWG. BY: / CHECK BY:	OF
REV. DATE:	REV. BY:		ORDER REVISION DATES:		
REV. DATE:	REV. BY:		PRODUCTION DATE:	DWG. BY:	

U:\Orders\17594.dwg, 1/9/2007 2:10:20 PM, 1:1, pl PDF995