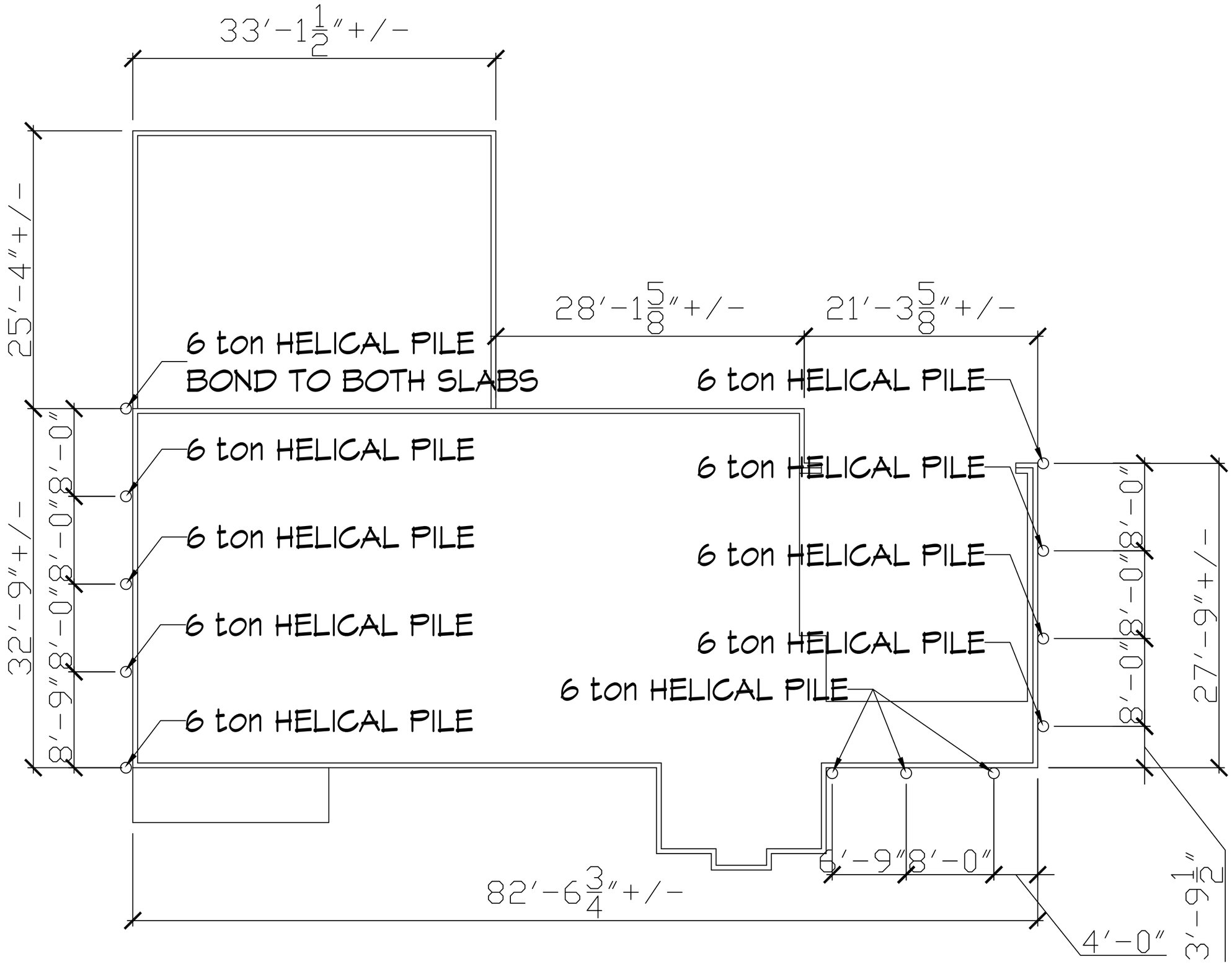
33'-1 1/2"+/-
25'-4"+/-
28'-1 5/8"+/-
21'-3 5/8"+/-
6 ton HELICAL PILE
BOND TO BOTH SLABS
6 ton HELICAL PILE
6 ton HELICAL PILE
6 ton HELICAL PILE
6 ton HELICAL PILE
6 ton HELICAL PILE
6 ton HELICAL PILE
6 ton HELICAL PILE
6 ton HELICAL PILE
6 ton HELICAL PILE
32'-9"+/-
8'-0"
8'-0"
8'-0"
8'-9"
8'-0"
8'-0"
8'-0"
8'-0"
27'-9"+/-
6'-9"
8'-0"
82'-6 3/4"+/-
4'-0"
3'-9 1/2"