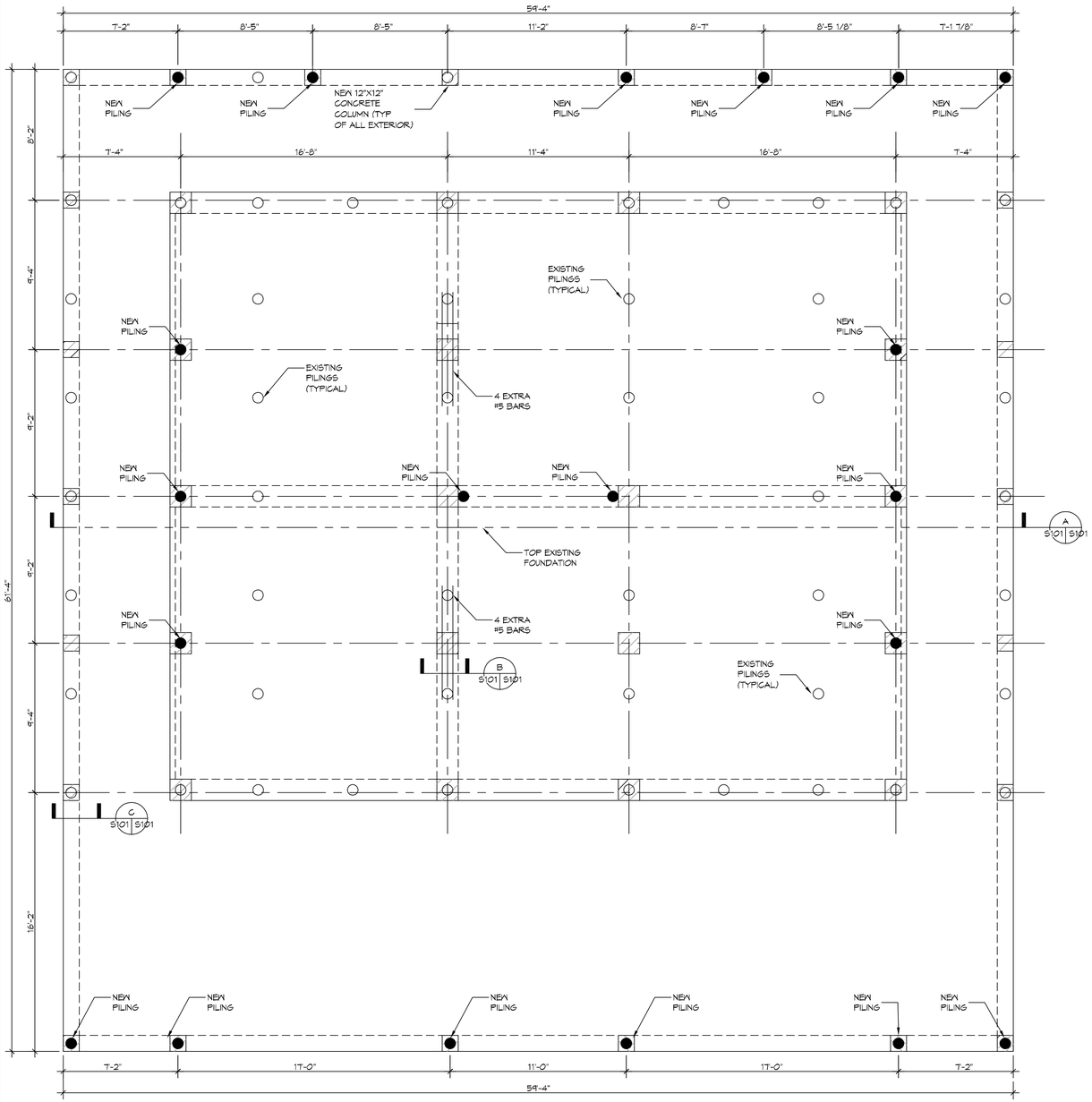

1 FOUNDATION PLAN
SCALE: 1/4"= 1'-0"

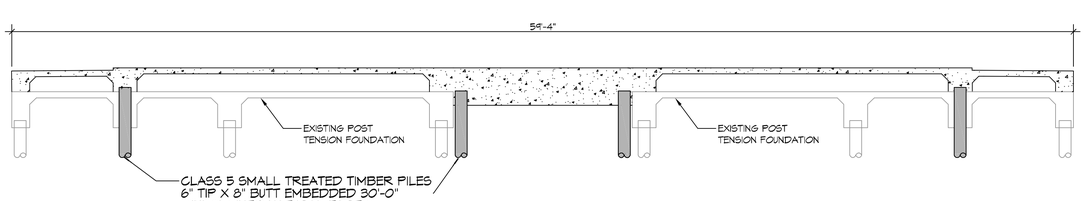

A S101 S101 SECTION
SCALE: 1/4" = 1'-0"

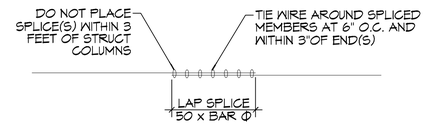

1 S101 S101 DETAIL
SCALE: 1/2" = 1'-0"

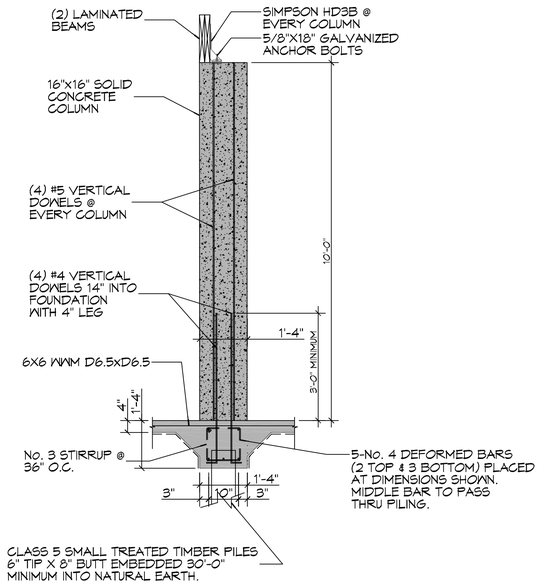

B S101 S101 SECTION
SCALE: 1/2" = 1'-0"

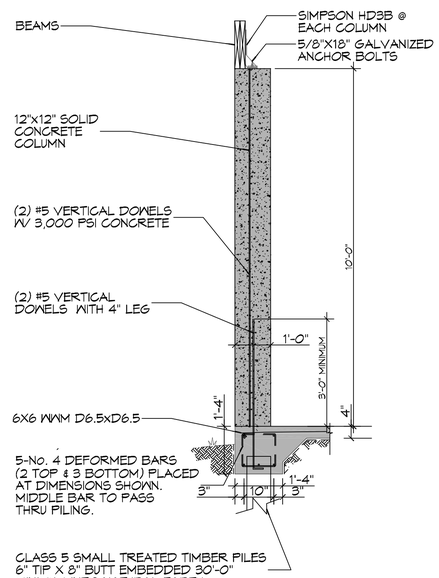

C S101 S101 SECTION
SCALE: 1/2" = 1'-0"

GENERAL FOUNDATION NOTES

1. THE CONCRETE MIX SHALL HAVE A MINIMUM COMPRESSIVE STRENGTH OF 3000 PSI AT 28 DAYS. CONCRETE MIX SHALL BE IN ACCORDANCE WITH ACI-318.
2. ALL CONVENTIONAL REINFORCING SHALL MEET ASTM-A615 (GRADE 60).
3. ONE LAYER OF POLYETHELENE VAPOR BARRIER SHALL BE PLACED UNDER ALL CONCRETE. VAPOR RETARDER TO BE 15 MIL. STRENGTH: ASTM E1745 CLASS A, PERMEANCE LESS THAN 0.01 PERMS, EQUAL TO STEGO INDUSTRIES STEGO WRAP ECO-SHEILD-E 15 MIL. BY EPRO OR IRON BAR 15 BY FLATIRON FILMS. PROVIDE APPROPRIATE ACCESSORIES FOR A COMPLETE SYSTEM.
4. ALL REINFORCING STEEL AND MESH SHALL BE SECURELY SUPPORTED TO PREVENT BOTH VERTICAL AND HORIZONTAL MOVEMENT DURING CONCRETE PLACEMENT.
5. THE CONTRACTOR SHALL VERIFY ALL DROPS, OFFSETS, CMU LEDGES, DIMENSIONS, AND CONFIGURATIONS. CONTRACTOR MUST BE RESPONSIBLE FOR SAME.
6. GRADE BEAM SIZES MAY VARY BY -5% TO +20%.
7. ALL SUBGRADE FILL SHALL BE SELECT GRANULAR MATERIAL COMPACTED TO ≥95% STANDARD PROCTOR DENSITY IN A MAXIMUM OF 6" LIFTS.
8. A MINIMUM OF 4" CONCRETE THICKNESS SHALL BE MAINTAINED THROUGHOUT THE SLAB.
9. ALL RUNOFF WATER MUST BE CARRIED AWAY FROM THE SLAB TO PREVENT SATURATION OF THE SUB-BASE.
10. ALL TREES WITHIN CLOSE PROXIMITY SHALL BE REMOVED TO PREVENT THE ROOTS FROM EXTENDING UNDER THE SLAB.
11. PROVIDE AND MAINTAIN IMMEDIATE SITE DRAINAGE BEFORE, DURING, AND AFTER CONSTRUCTION. PROVIDE GRADING, SWELLS, AND SUMP PUMPS AS MAY BE REQUIRED TO IMMEDIATELY DRAIN ALL RAINWATER FROM THE CONSTRUCTION AREA. FOOTING EXCAVATIONS SHOULD BE OBSERVED AND CONCRETE TO BE PLACED AS QUICKLY AS POSSIBLE TO AVOID EXPOSURE OF THE FOOTING BOTTOMS TO WETTING AND DRYING. SURFACE RUNOFF WATER SHOULD BE DRAINED AWAY FROM THE EXCAVATIONS AND NOT BE ALLOWED TO POND PRIOR TO OR AFTER CONCRETE PLACEMENT. IF IT IS REQUIRED THAT A FOOTING EXCAVATION BE LEFT OPEN FOR MORE THAN ONE DAY, IT SHOULD BE PROTECTED TO REDUCE EVAPORATION OR ENTRY OF MOISTURE.
12. NEW SPREAD CONCRETE FOOTINGS AND CONTINUOUS FOOTINGS, BEARING ON COMPACTED STRUCTURAL FILL, AT LEAST 2 FEET BELOW FINISHED GRADE, SHOULD BE DESIGNED FOR MAXIMUM NET ALLOWABLE BEARING PRESSURES OF 1,200 PSF AND 2,000 PSF RESPECTIVELY, BASED ON DEAD LOADS AND DESIGN LIVE LOADS.
13. BASED ON THE RESULTS OF THE FIELD AND LABORATORY TESTS, AND THE ANTICIPATED FOUNDATION LOADS, DIFFERENTIAL SETTLEMENT IS ESTIMATED TO BE LESS THAN 1 INCH.
14. TREAT SOIL BELOW SLAB FOR TERMITES.

DAMMON ENGINEERING, INC.
LOUISIANA & MISSISSIPPI
www.dammonengineering.com
info@dammonengineering.com
PH: 985.649.5832
Chief Engineer: Brian Mistich, PE
554 Old Spanish Trail
Slidell, LA 70458

#	DESCRIPTION	DATE

REVISIONS

SEAL:

STATE OF LOUISIANA
BRIAN A. MISTICH
License No. 30187
PROFESSIONAL ENGINEER

STRUCTURAL DWG

MIKE EWARDS

259 LAKEVIEW DRIVE
SLIDELL, LA

JOB No:	2316	DATE:	10-07-2019
DRAWN BY:	CKD	CHECKED BY:	CKD

The data contained on this drawing, as well as the design, information, and other expressions (opinions) derived from it, are intellectual properties of Dammon Engineering. Any and all parties who use, reproduce, or publish any of the data contained on this drawing without the express written consent of Dammon Engineering, Inc. shall be held liable for damages. Dammon Engineering, Inc. shall not be held responsible for any modifications and/or changes made to this document without the express written consent of Dammon Engineering, Inc.

SHEET TITLE:
FOUNDATION PLAN

DRAWING NUMBER:

S101

SHEET No: 1 of 1

FILE NAME: J:\-Projects-of-Standard-Job\Mike Edwards Residence 2016\Current Drawings\S101 - Found Last Revised By: JKOP DATE & TIME: Monday, October 7, 2019 10:31:17 AM