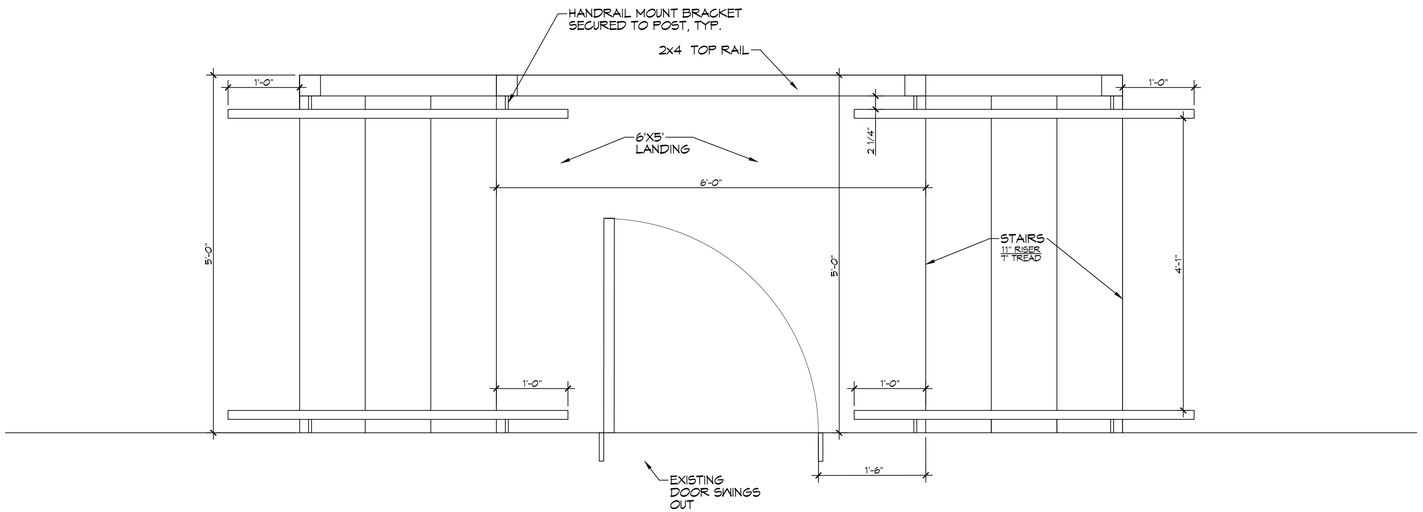

1 S100 | S100 N

STAIRS AND UPPER DECK LANDING

SCALE: 1" = 1'-0"

STAIRS

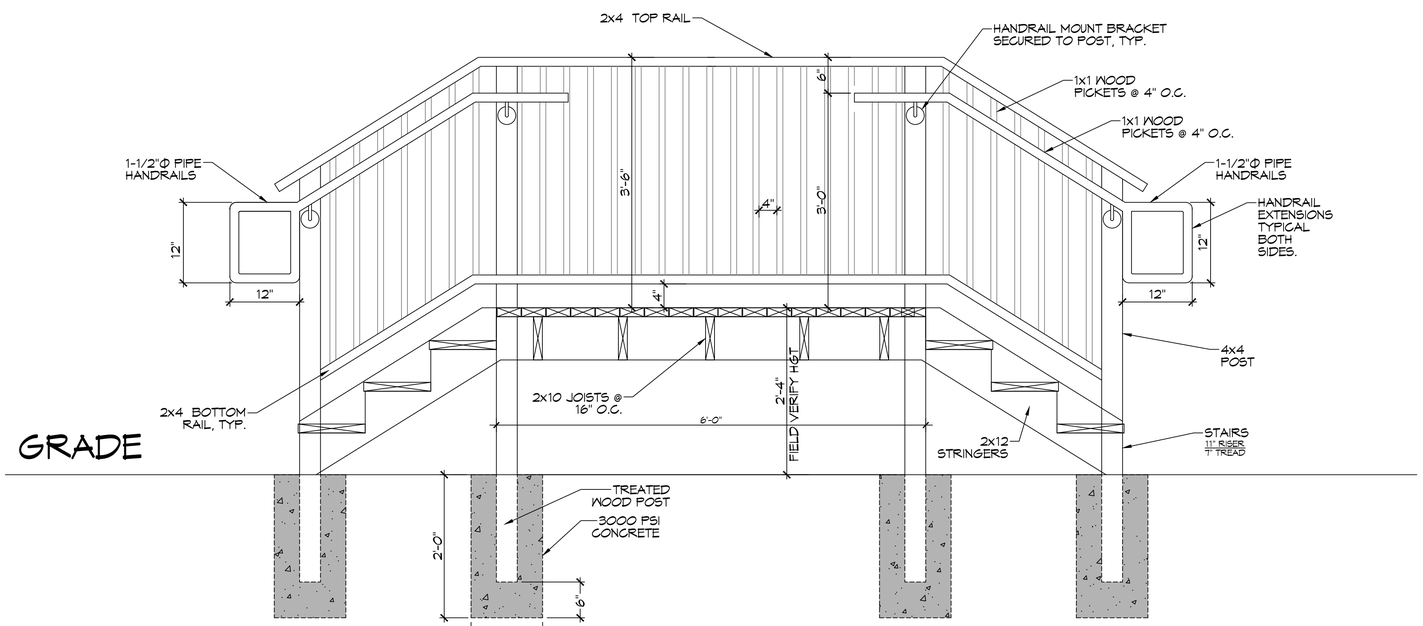

STAIRS AND UPPER DECK SECTION

SCALE: 1" = 1'-0"

STAIRS

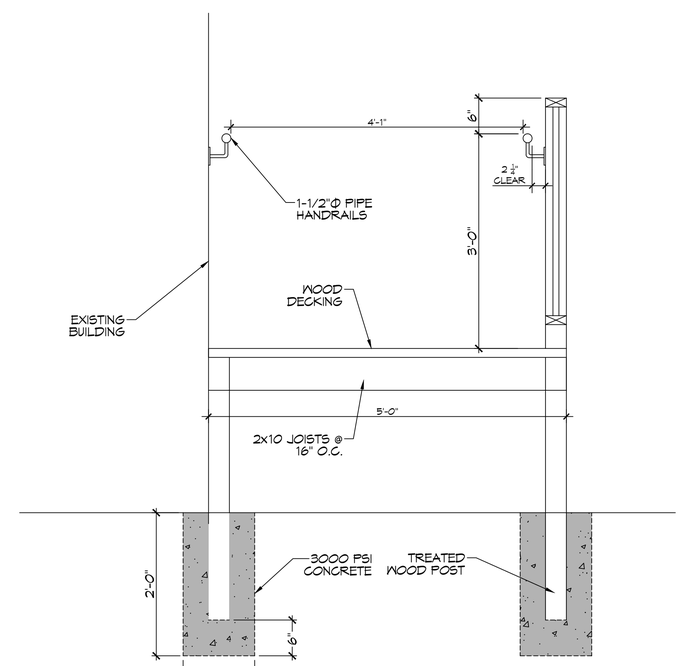

TYPICAL SECTION

SCALE: 1" = 1'-0"

STAIRS

DAMMON ENGINEERING, INC.
www.dammonengineering.com
info@dammonengineering.com
Fax: 985.641.5950
1554 Old Spanish Trail
Slidell, LA 70458
PH: 985.649.5832

REVISIONS

#	DESCRIPTION	DATE

SEAL:

STATE OF LOUISIANA
BRIAN A. MISTICH
License No. 30187
PROFESSIONAL ENGINEER

NEW ADA STAIRS
PURVIS FINANCIAL INC.
1324 SEVENTH ST.
SLIDELL, LA. 70458

JOB No:	2023	DATE:	05-08-2023
DRAWN BY:	CKD	CHECKED BY:	BAM

SHEET TITLE:
NEW ADA STAIRS

DRAWING NUMBER:

S100

SHEET No: 1 of 1