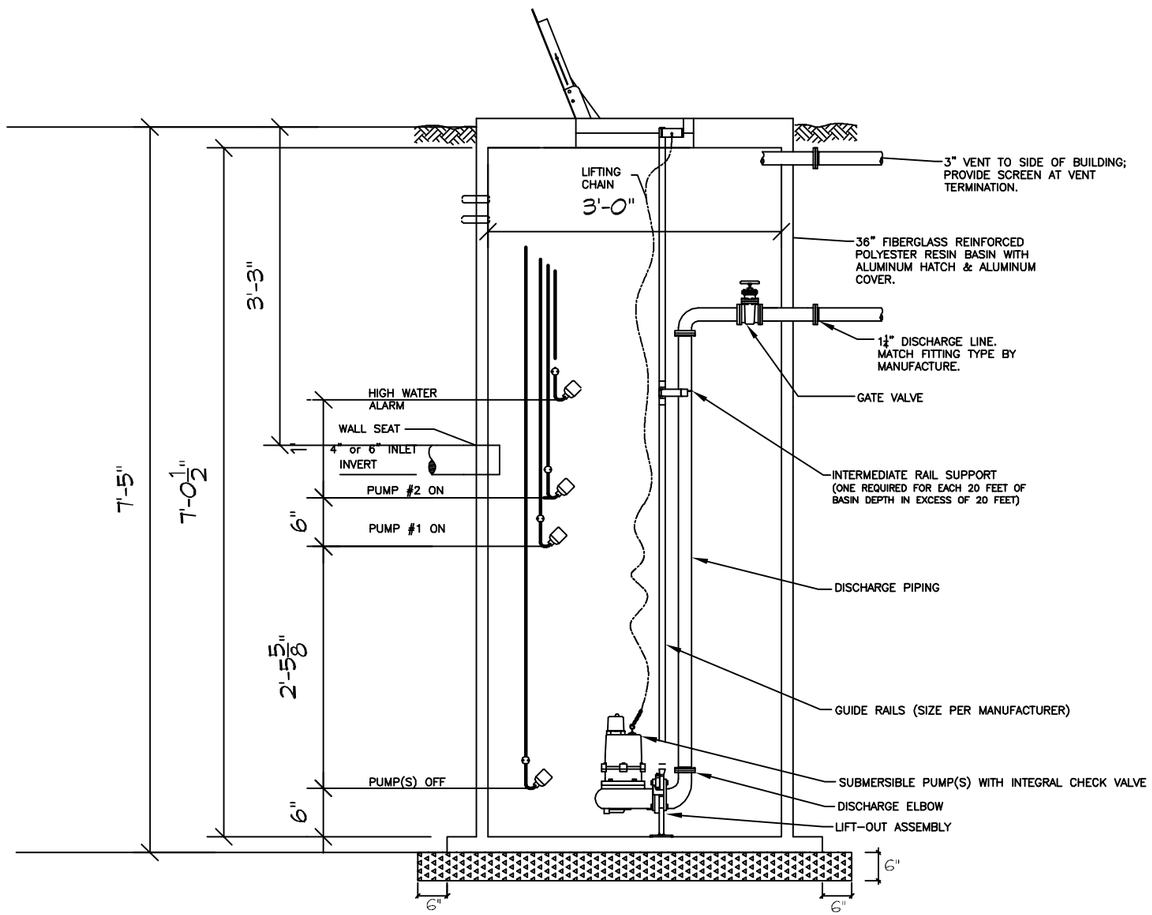
LIFTING CHAIN
3'-0"
3" VENT TO SIDE OF BUILDING; PROVIDE SCREEN AT VENT TERMINATION.
36" FIBERGLASS REINFORCED POLYESTER RESIN BASIN WITH ALUMINUM HATCH & ALUMINUM COVER.
1¼" DISCHARGE LINE. MATCH FITTING TYPE BY MANUFACTURE.
GATE VALVE
INTERMEDIATE RAIL SUPPORT (ONE REQUIRED FOR EACH 20 FEET OF BASIN DEPTH IN EXCESS OF 20 FEET)
DISCHARGE PIPING
GUIDE RAILS (SIZE PER MANUFACTURER)
SUBMERSIBLE PUMP(S) WITH INTEGRAL CHECK VALVE
DISCHARGE ELBOW
LIFT-OUT ASSEMBLY
HIGH WATER ALARM
WALL SEAT
4" or 6" INLET
INVERT
PUMP #2 ON
PUMP #1 ON
PUMP(S) OFF
7'-5"
7'-0½"
3'-3"
6"
2'-5⅝"
6"
6"
6"
6"

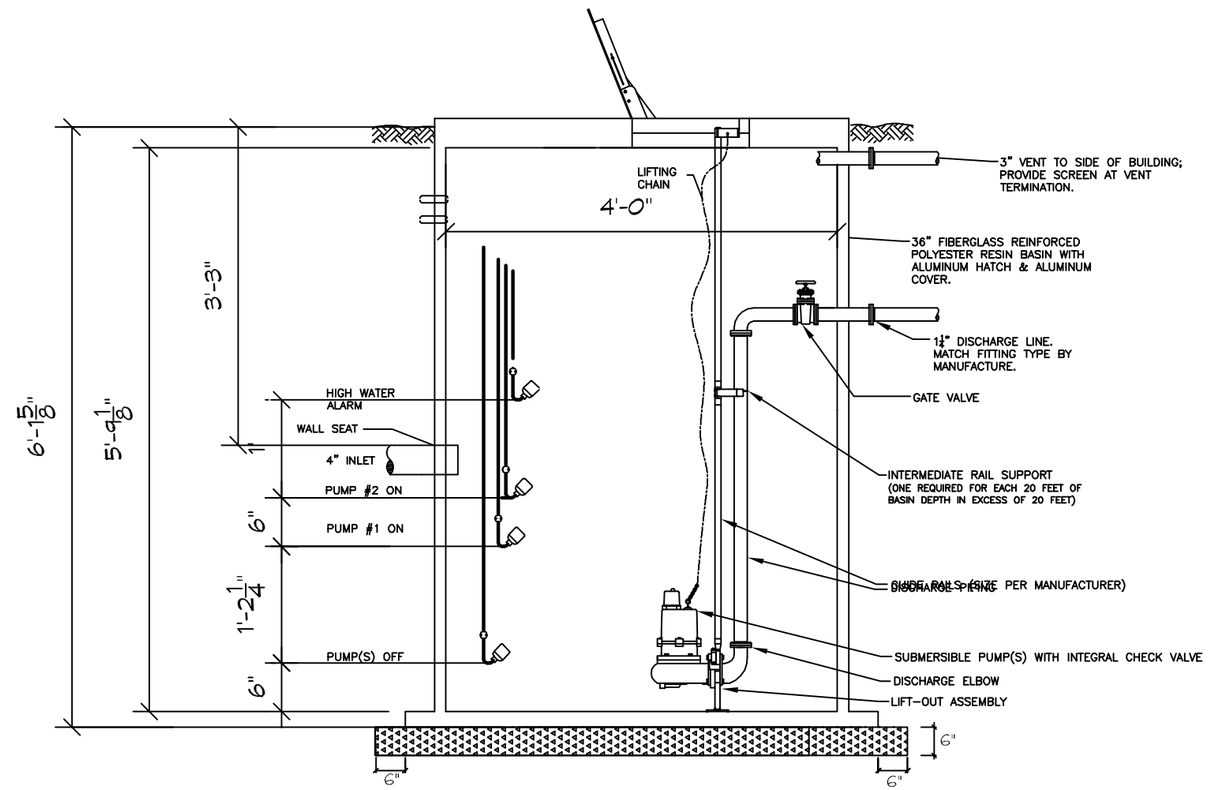
LIFTING CHAIN
4'-0"
3" VENT TO SIDE OF BUILDING; PROVIDE SCREEN AT VENT TERMINATION.
36" FIBERGLASS REINFORCED POLYESTER RESIN BASIN WITH ALUMINUM HATCH & ALUMINUM COVER.
1¼" DISCHARGE LINE. MATCH FITTING TYPE BY MANUFACTURE.
GATE VALVE
INTERMEDIATE RAIL SUPPORT (ONE REQUIRED FOR EACH 20 FEET OF BASIN DEPTH IN EXCESS OF 20 FEET)
GUIDE RAILS (SIZE PER MANUFACTURER)
DISCHARGE PIPING
SUBMERSIBLE PUMP(S) WITH INTEGRAL CHECK VALVE
DISCHARGE ELBOW
LIFT-OUT ASSEMBLY
HIGH WATER ALARM
WALL SEAT
4" INLET
PUMP #2 ON
PUMP #1 ON
PUMP(S) OFF
6'-1⅝"
5'-9⅛"
3'-3"
6"
1'-2¼"
6"
6"
6"
6"