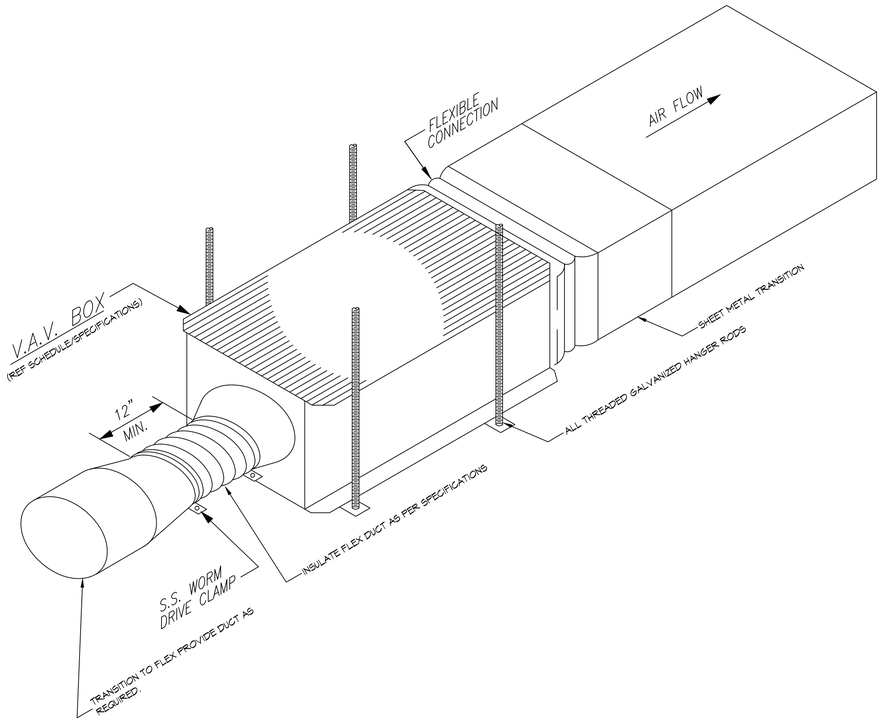

6 VARIABLE AIR VOLUME BOX
SCALE: NTS

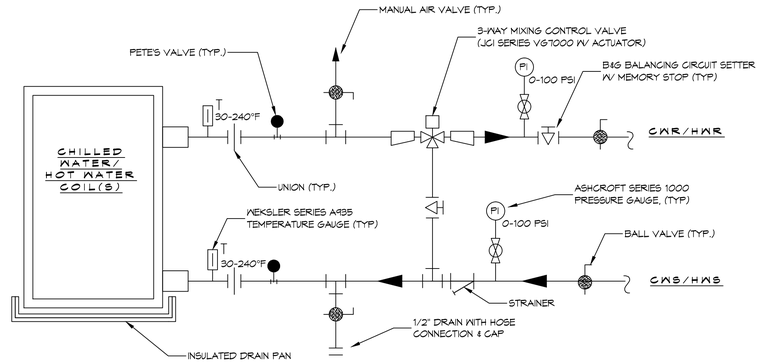

5 COIL PIPING SCHEMATIC
SCALE: NTS

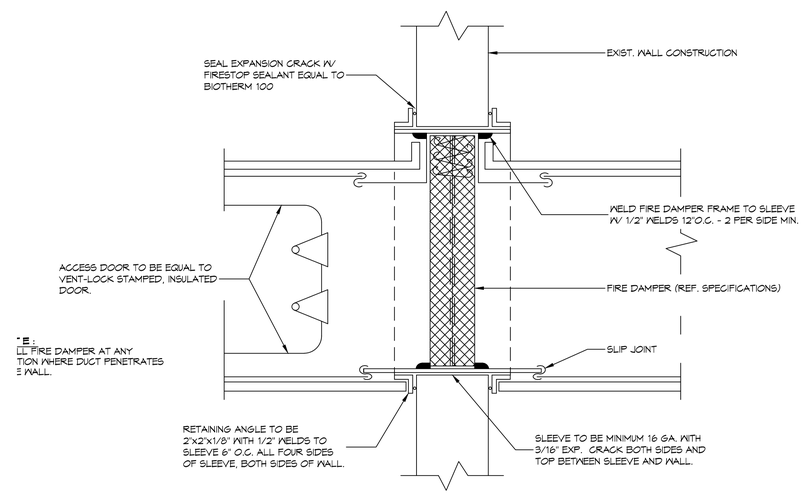

4 LOW VELOCITY DUCT-VERTICAL FIRE DAMPER
SCALE: NTS

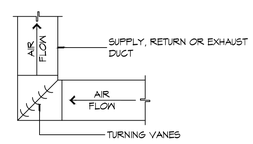

C SQUARE ELBOW

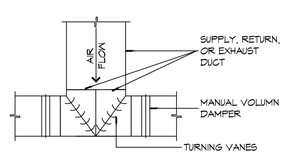

B DUCT SPLITTER

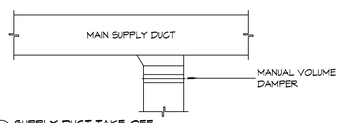

A SUPPLY DUCT TAKE-OFF

NOTES:
1. LENGTHS "X" AND "Y" SHALL BE DETERMINED BY AHU BASED ON TOTAL STATIC PRESSURE.
2. "X" AND "Y" SHALL BE EQUAL TO MINIMUM 1/2 TOTAL UNIT STATIC PRESSURE.
3. ALL CONDENSATE PIPING SHALL BE SLOPED AT 1/4" PER FOOT

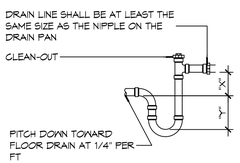

3 DETAIL
SCALE: NTS — CONDENSATE TRAP

2 DETAILS
SCALE: NTS — TYPICAL DUCT CONNECTIONS

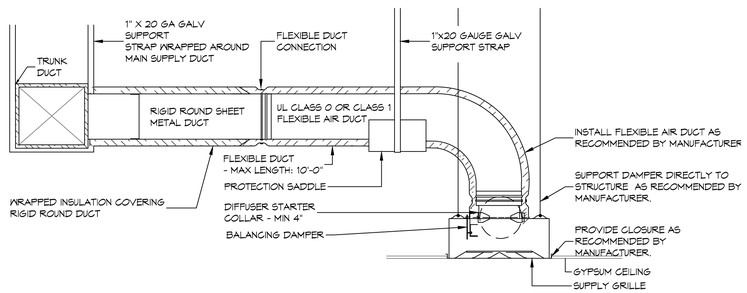

1 TYPICAL NON-RATED CEILING DIFFUSER
SCALE: NTS — TYPICAL SUPPLY AIR REGISTERS

DAMMON ENGINEERING, INC.
LOUISIANA & MISSISSIPPI
www.dammonengineering.com
info@dammonengineering.com
PH: 985.649.5832
Chief Engineer: Brian Mistch, PE
5544 Old Spanish Trail
Slidell, LA 70458

#	DESCRIPTION	DATE

REVISIONS

SEAL:

HVAC SYSTEM REPLACEMENT
PROJECT NO.: 01-107-06B-11, F.01003807

STATE POLICE TROOP L HEADQUARTERS

2600 N CAUSEWAY BLVD, MANDEVILLE, LA 70471
STATE ID: S003814 SITE CODE: 1-52-004

JOB No:	23-12	DATE:	7/25/2014
DRAWN BY:	RLD	CHECKED BY:	DD

THIS DOCUMENT IS PROPERTY OF DAMMON ENGINEERING, INC. AND MAY NOT BE REPRODUCED OR USED FOR OTHER PROJECTS WITHOUT WRITTEN CONSENT OF DAMMON ENGINEERING, INC. ANY REPRODUCTION OR USE FOR OTHER PROJECTS WITHOUT WRITTEN CONSENT IS PROHIBITED. THIS DOCUMENT IS THE PROPERTY OF DAMMON ENGINEERING, INC. AND MUST BE RETURNED UPON REQUEST. THE WORK, IN WHOLE, HAS BEEN PREPARED AND SUPERVISED WITHOUT WRITTEN CONSENT OF DAMMON ENGINEERING, INC. ANY REPRODUCTION OR USE FOR OTHER PROJECTS WITHOUT WRITTEN CONSENT IS PROHIBITED.

SHEET TITLE:
HVAC DETAILS

DRAWING NUMBER:
M103

SHEET No: 8 of 9

FILE NAME: J:\ - Government\1372 - Troop L State Police HVAC Renovation\Drawing\Current Drawings\M103 - Details.dwg PLOT DATE & TIME: Thursday, July 25, 2013 3:27:54 PM