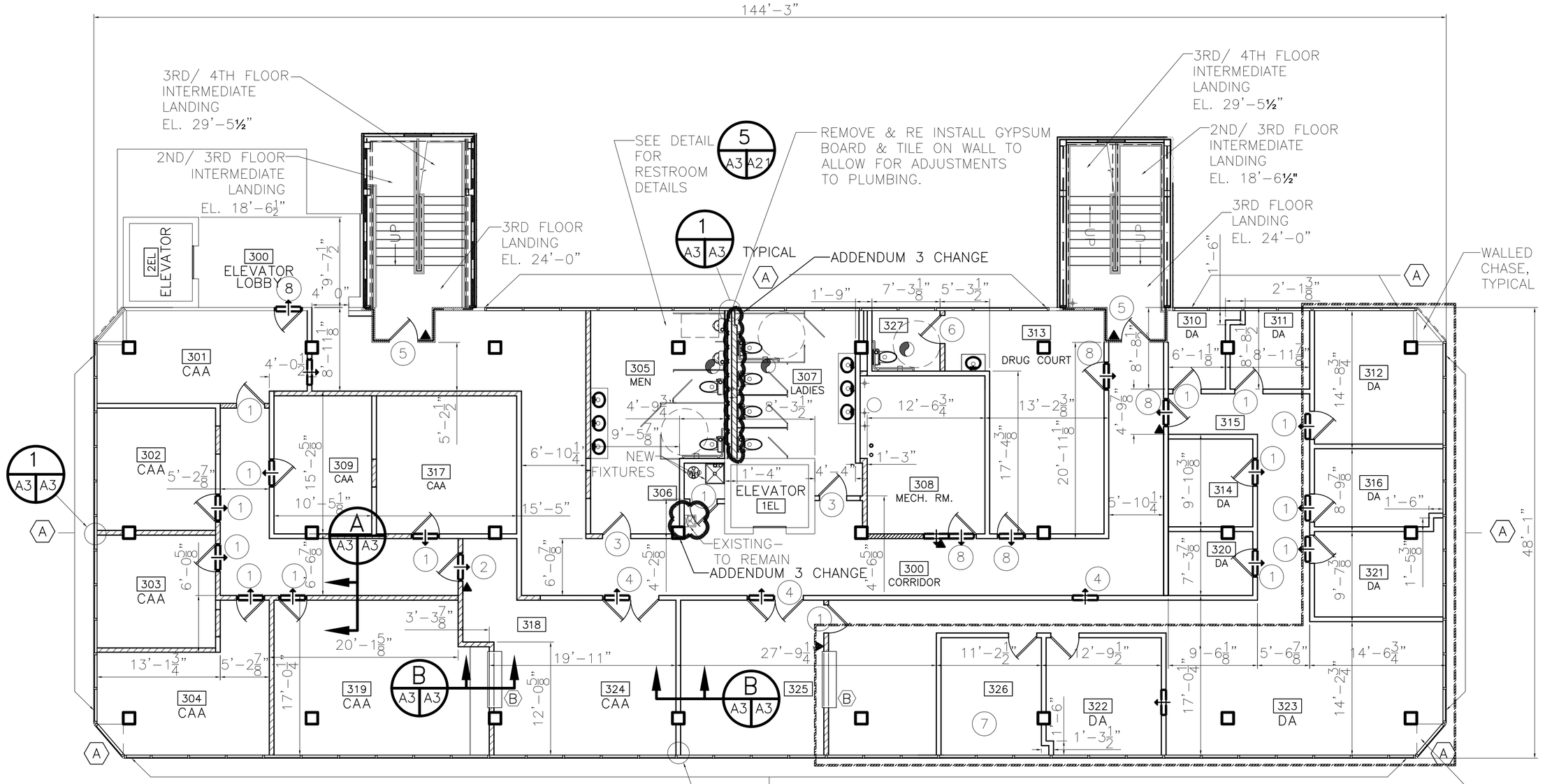

NOTE:
KITCHEN CABINETS SHALL BE MEDIUM COMMERCIAL GRADE, FACTORY BUILT. COUNTER TOPS SHALL BE MANMADE MARBLE OR EQUAL.

NOTE:
INSTALL DUCTWORK ENTRANCES AS REQUIRED. SEE DWG. M-3 FOR A/C DETAILS

THIRD FLOOR PLAN
SCALE: 1/8"= 1'-0"

LEGEND
- NEW WALL
- NEW 1 HOUR - RATED WALL
- EXISTING WALL
- CURTAIN WALL
- SECURITY ACCESS DOOR - (SCANNER BY OTHERS)
- RETURN AIR CASED OPENING IN WALL - (ROOM TO CEILING)- TO EQUAL 200 SQ. IN.

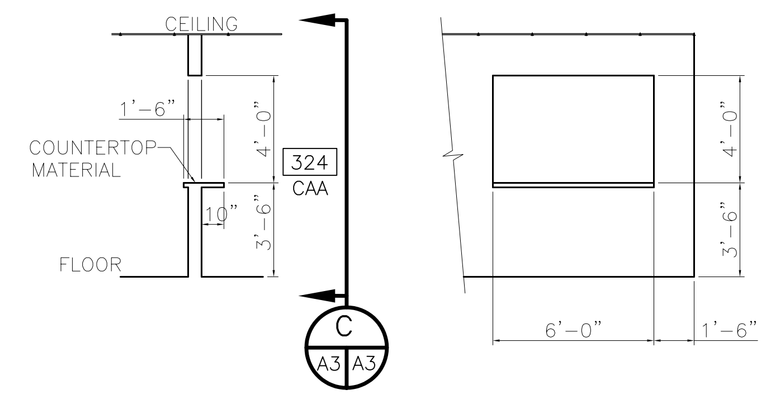

SECTION B
SCALE: 1/4" = 1'-0"

SECTION C
SCALE: 1/4" = 1'-0"

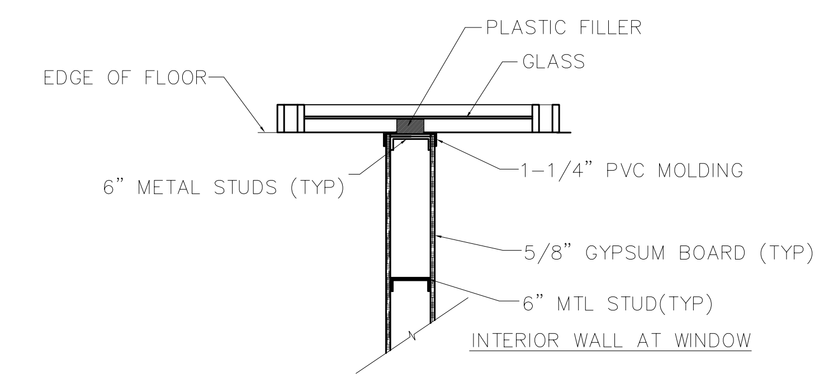

INTERIOR WALL AT WINDOW

DETAIL 1
NTS

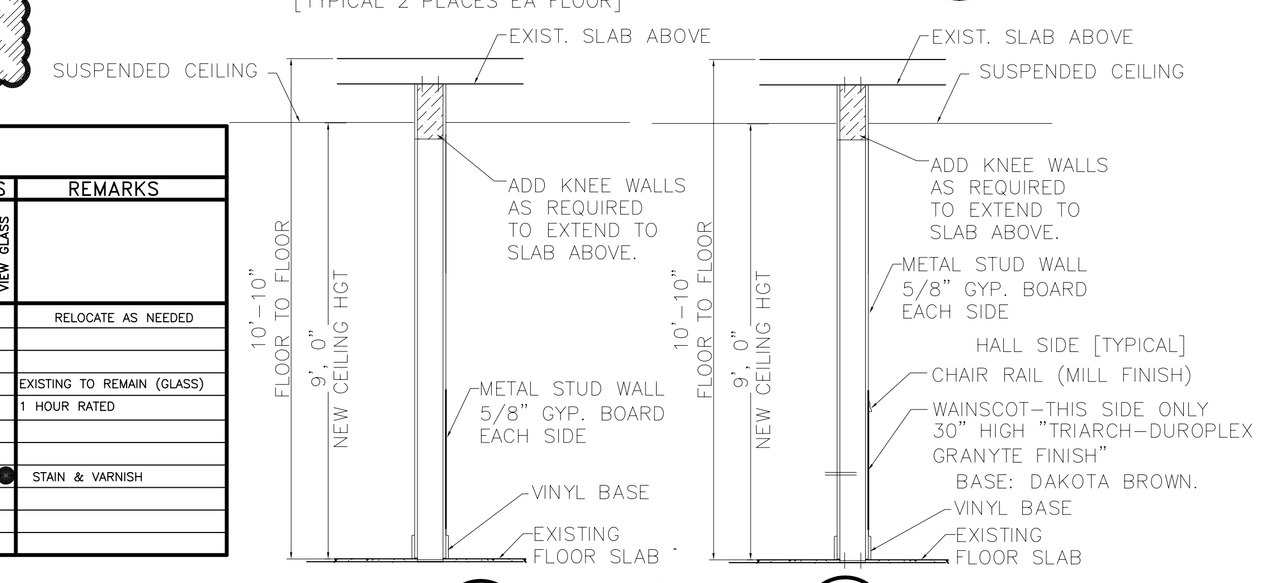

SECTION B
NTS

SECTION A
NTS

TYPICAL ONLY WHERE WALL IS NOT 9 FT. HIGH

FINISH SCHEDULE

ROOM	FLOOR: CONCRETE	FLOOR: VINYL TILE	FLOOR: CARPET	FLOOR: CERAMIC TILE	FLOOR: PAINTED WOOD	BASE: VINYL	BASE: WOOD	BASE: NONE	WALLS: PANELING	WALLS: GYPSUM BOARD	WALLS: GREENBOARD	WALLS: PAINT	WALLS: CERAMIC TILE	CEILING: ACOUSTIC TILE	CEILING: GYPSUM BOARD	CEILING: FRP BOARD	CEILING: OPEN	CEILING: TEXT. CONC.	CLG HT	REMARKS
300		●				●				●		●		●					8'-6"	
301			●			●				●		●		●					9'-0"	
302			●			●				●		●		●					9'-0"	
303			●			●				●		●		●					9'-0"	
304			●			●				●		●		●					9'-0"	
305				●		●				●		●	●	●					9'-0"	
306		●				●					●	●		●					9'-0"	
307				●		●				●		●	●	●					9'-0"	
308	●							●		●		●					●		10'-4"	
309			●			●				●		●		●					9'-0"	
310			●			●				●		●		●					9'-0"	
311			●			●				●		●		●					9'-0"	
312			●			●				●		●		●					9'-0"	
313			●			●				●		●		●					9'-0"	
314			●			●				●		●		●					9'-0"	
315			●			●				●		●		●					9'-0"	
316			●			●				●		●		●					9'-0"	
317			●			●				●		●		●					9'-0"	
318			●			●						●		●					9'-0"	
319			●			●						●		●					9'-0"	
320			●			●						●		●					9'-0"	
321			●			●				●		●		●					9'-0"	
322			●			●				●		●		●					9'-0"	
323			●			●				●		●		●					9'-0"	
324			●			●				●		●		●					9'-0"	
325			●			●				●		●		●					9'-0"	
326			●			●				●		●		●					9'-0"	
327		●				●				●		●		●					9'-0"	
																			9'-0"	

DOOR & HARDWARE SCHEDULE

DOOR		TYPE: SOLID WOOD	TYPE: HOLLOW	TYPE: ALUM./GLASS	TYPE: STEEL	FRAME: MASONITE	FRAME: STEEL	FRAME: ALUMINUM	FRAME: WOOD	FRAME: CASED OPENING	HINGE: DOUBLE SWING	HINGE: BUTT 1 1/2 PR	LOCK: PASSAGE	LOCK: PRIVACY	LOCK: DEADBOLT	LOCK: KEYED HANDLE	LOCK: PUSH PULL	ACCESSORIES: PANIC	ACCESSORIES: THRESHOLD	ACCESSORIES: WEATHERSTRIP	ACCESSORIES: DOOR STOP	ACCESSORIES: ALARM	ACCESSORIES: WIRE GLASS	ACCESSORIES: VIEW GLASS	REMARKS
1	3/0x7/0																								RELOCATE AS NEEDED
2	3/0x7/0	●					●					●				●				●					
3	3/0x7/0	●					●					●					●								
4	(2) 3/0x7/0																								EXISTING TO REMAIN (GLASS)
5	3/0x7/0	●					●					●				●		●		●					1 HOUR RATED
6	3/0x7/0	●					●					●		●						●					
7	3/0x7/0	●					●					●		●						●					
8	3/0x7/0	●					●					●				●				●			●		STAIN & VARNISH

DOORS SHOWN WITH ▲ SHALL BE EQUIPPED WITH ELECTRIC STRIKE FOR CARD READER

UNDERCUT ALL DOORS 3/4" TO ALL FOR PROPER EXHAUST AIR FLOW

WINDOW SCHEDULE

WINDOW		TYPE: FIXED	TYPE: VERTICAL SLIDE	TYPE: HORIZONAL SLIDE	TYPE: STORE FRONT	FRAME: STEEL	FRAME: ALUMINUM	FRAME: WOOD	GLASS: TINTED	GLASS: PLAIN	GLASS: GLAZED	GLASS: WIREGLASS	LITES: NONE	LITES: 2/2	LITES: 4/4	LITES: 6/6	LITES: 8/8	ACCESSORIES: LOCK	ACCESSORIES: ALARM	ACCESSORIES: SCREEN	ACCESSORIES: SHUTTER	ACCESSORIES: NONE	REMARKS
A	*4/0x5/0	●					●			●				●								●	APPROXIMATELY 3,700 SQ. FT.
B	6/0x4/0			●			●				●			●				●				●	SERVICE WINDOW

*FINAL SIZES TO BE DETERMINED BY VENDOR FROM FIELD MEASUREMENTS [TYP. ALL FLOORS]

= ADDENDUM CHANGE

= 09/19/07 CHANGE

-INDICATES AREAS CHANGED- 10/17/08

RFP 6 REVISED: 10/17/08ab
REVISED: 11/05/07ab
REVISED: 09/19/07ab
ADDENDUM REVISED: 08/20/07ab
REVISED: 05/21/07ab
REVISED: 05/17/07
REVISED: 02/19/07
REVISED: 01/22/07

3RD FLOOR RENOVATE PLAN

ST. TAMMANY PARISH ADMIN. COMPLEX
520 OLD SPANISH TRAIL
SLIDELL, LOUISIANA

RENOVATE OFFICE BUILDING

DAMMON ENGINEERING. INC.
1095 FLORIDA AVENUE 985-649-5832 SLIDELL, LA. 70458
DAMMONENGINEERING.COM

SCALE:AS NOTED
FILE:
JOB NO. 1729
DATE:1-8-07
SHEET A-3
OF

CONTRACT SET- 10/10/07