4.16 WATER CLOSETS.

4.16.1 GENERAL. ACCESSIBLE WATER CLOSETS SHALL COMPLY WITH 4.16.

4.16.2 CLEAR FLOOR SPACE. CLEAR FLOOR SPACE FOR WATER CLOSETS NOT IN STALLS SHALL COMPLY WITH 4.16. CLEAR FLOOR SPACE MAY BE ARRANGED TO ALLOW EITHER A LEFT–HANDED OR RIGHT–HANDED APPROACH.

4.16.3* HEIGHT. THE HEIGHT OF WATER CLOSETS SHALL BE 17" TO 19" (430mm TO 485mm), MEASURED TO THE TOP OF THE TOILET SEAT. SEATS SHALL NOT BE SPRUNG TO RETURN TO A LIFTED POSITION (SEE FIG. 31).

4.16.4* GRAB BARS. GRAB BARS FOR WATER CLOSETS NOT LOCATED IN STALL SHALL COMPLY WITH 4.26 AND FIG. 31. THE GRAB BAR BEHIND THE WATER CLOSET SHALL BE 36" (915mm) MINIMUM.

4.16.5* FLUSH CONTROLS. FLUSH CONTROLS SHALL BE HAND OPERATED OR AUTOMATIC AND SHALL COMPLY WITH 4.27.4. CONTROLS FOR FLUSH VALVES SHALL BE MOUNTED ON THE WIDE SIDE OF TOILET AREAS NO MORE THAN 44" (1120mm) ABOVE THE FLOOR.

4.16.6 DISPENSERS. TOILET PAPER DISPENSERS SHALL BE INSTALLED WITHIN REACH, AS SHOWN IN FIG. 31. DISPENSERS THAT CONTROL, DELIVER, OR THAT DO NOT PERMIT CONTINUOUS PAPER FLOW, SHALL NOT BE USED.

4.17 TOILET STALLS.

4.17.1 LOCATION. ACCESSIBLE TOILET STALLS SHALL BE ON AN ACCESSIBLE ROUTE AND SHALL MEET THE REQUIREMENTS OF 4.17.

4.17.2 WATER CLOSETS. WATER CLOSETS IN ACCESSIBLE STALLS SHALL COMPLY WITH 4.16.

4.17.3* SIZE AND ARRANGEMENT. THE SIZE AND ARRANGEMENT OF THE STANDARD TOILET STALL SHALL COMPLY WITH 4.17. STANDARD TOILET STALLS WITH A MINIMUM DEPTH OF 56" (1420mm) SHALL HAVE WALL–MOUNTED WATER CLOSETS. IF THE DEPTH OF A STANDARD TOILET STALL IS INCREASED AT LEAST 3" (75mm), THEN A FLOOR–MOUNTED WATER CLOSET MAY BE USED. ARRANGEMENTS SHOWN FOR STANDARD TOILET STALLS MAY BE REVERSED TO ALLOW EITHER A LEFT–OR RIGHT–HAND APPROACH. ADDITIONAL STALL SHALL BE PROVIDED IN CONFORMANCE WITH 4.22.4.
EXCEPTION: IN INSTANCES OF ALTERATION WORK WHERE PROVISIOIN OF A STANDARD STALL IS TECHNICALLY INFEASIBLE OR WHERE PLUMBING CODE REQUIREMENTS PREVENT COMBINING EXISTING STALLS TO PROVIDE SPACE, EITHER ALTERNATE STALL, MAY BE PROVIDED IN LIEU OF THE STANDARD STALL.

4.17.4 TOE CLEARANCES. IN STANDARD STALLS, THE FRONT PARTITION AND AT LEAST ONE SIDE PARTITION SHALL PROVIDE A TOE CLEARANCE OF AT LEAST 9" (230mm) ABOVE THE FLOOR. IF THE DEPTH OF THE STALL IS GREATER THAN 60" (1525mm), THEN THE TOE CLEARANCE IS NOT REQUIRED.

4.17.5* DOORS. TOILET STALL DOORS, INCLUDING DOOR HARDWARE, SHALL COMPLY WITH 4.13. IF TOILET STALL APPROACH IS FROM THE LATCH SIDE OF THE STALL DOOR, CLEARANCE BETWEEN THE DOOR SIDE OF THE STALL AND ANY OBSTRUCTION MAY BE REDUCED TO A MINIMUM OF 42" (1065mm).

4.17.6 GRAB BARS. GRAB BARS MAY BE MOUNTED WITH ANY DESIRED METHOD AS LONG AS THEY HAVE A GRIPPING SURFACE AT THE LOCATIONS SHOWN IN FIG. 31 AND DO NOT OBSTRUCT THE REQUIRED CLEAR FLOOR AREA. GRAB BARS SHALL COMPLY WITH 4.26.

4.18 URINALS.

4.18.1 GENERAL. ACCESSIBLE URINALS SHALL COMPLY WITH 4.18.

4.18.2 HEIGHT. URINALS SHALL BE STALL–TYPE OR WALL–HUNG WITH AN ELONGATED RIM AT A MAXIMUM OF 17" (430mm) ABOVE THE FINISH FLOOR.

4.18.3 CLEAR FLOOR SPACE. A CLEAR FLOOR SPACE 30" BY 48" (760mM BY 1220mm) SHALL BE PROVIDED IN FRONT OF URINALS TO ALLOW FORWARD APPROACH. THIS CLEAR SPACE SHALL ADJOIN OR OVERLAP AN ACCESSIBLE ROUTE AND SHALL COMPLY WITH 4.2.4. URINAL SHIELDS THAT DO NOT EXTEND BEYOND THE FRONT EDGE OF THE URINAL RIM MAY BE PROVIDED WITH 29" (735mm) CLEARANCE BETWEEN THEM.

4.18.4 FLUSH CONTROLS. FLUSH CONTROLS SHALL BE HAND OPERATED OR AUTOMATIC, AND SHALL COMPLY WITH 4.27.4, AND SHALL BE MOUNTED NO MORE THAN 44" (1120mm) ABOVE THE FINISH FLOOR.

4.19 LAVATORIES & MIRRORS.

4.19.1 GENERAL. THE REQUIREMENTS OF 4.19 SHALL APPLY TO LAVATORY FIXTURES, VANITIES, AND BUILT–IN LAVATORIES.

4.19.2 HEIGHT & CLEARANCES. LAVATORIES SHALL BE MOUNTED WITH THE RIM OR COUNTER SURFACE NO HIGHER THAN 34" (865mm) ABOVE THE FINISH FLOOR. PROVIDE A CLEARANCE OF AT LEAST 29" (735mm) ABOVE THE FINISH FLOOR TO THE BOTTOM OF THE APRON (SEE FIG. 31).

4.19.3 CLEAR FLOOR SPACE. A CLEAR FLOOR SPACE 30" BY 48" (760mm BY 1220mm) COMPLYING WITH 4.2.4 SHALL BE PROVIDED IN FRONT OF A LAVATORY TO ALLOW FORWARD APPROACH. SUCH CLEAR FLOOR SPACE SHALL ADJOIN OR OVERLAP AN ACCESSIBLE ROUTE AND SHALL EXTEND A MAXIMUM OF 19" (485mm) UNDERNEATH THE LAVATORY.

4.19.4 EXPOSED PIPES & SURFACES. HOT WATER AND DRAIN PIPES UNDER LAVATORIES SHALL BE INSULATED OR OTHERWISE CONFIGURED TO PROTECT AGAINST CONTACT. THERE SHALL BE NO SHARP OR ABRASIVE SURFACES UNDER LAVATORIES.

4.19.5 FAUCETS. FAUCETS SHALL COMPLY WITH 4.27.4. LEVER–OPERATED, PUSH–TYPE, AND ELECTRONICALLY CONTROLLED MECHANISMS ARE EXAMPLES OF ACCEPTABLE DESIGNS. IF SELF–CLOSING VALVES ARE USED, THE FAUCET SHALL REMAIN OPEN FOR AT LEAST 10 SECONDS.

4.19.6* MIRRORS. MIRRORS SHALL BE MOUNTED WITH THE BOTTOM EDGE OF THE REFLECTING SURFACE NO HIGHER THAN 40" (1015mm) ABOVE THE FINISH FLOOR (SEE FIG. 31).

4.20 BATHTUBS.

4.20.1 GENERAL. ACCESSIBLE BATHTUBS SHALL COMPLY WITH 4.20.

4.20.2 FLOOR SPACE. CLEAR FLOOR SPACE IN FRONT OF BATHTUBS SHALL COMPLY WITH 4.20.

4.20.3 SEAT. AN IN–TUB SEAT OR A SEAT AT THE HEAD END OF THE TUB SHALL BE PROVIDED AS SHOWN IN FIG. 34. THE STRUCTURAL STRENGHT OF SEATS AND THEIR ATTACHMENTS SHALL COMPLY WITH 4.26.3. SEATS SHALL BE MOUNTED SECURELY AND SHALL NOT SLIP DURING USE.

4.20.4 GRAB BARS. GRAB BARS COMPLYING WITH 4.26 SHALL BE PROVIDED AS SHOWN IN FIG. 34.

4.20.5 CONTROLS. FAUCETS AND OTHER CONTROLS COMPLYING WITH 4.27.4 SHALL BE LOCATED AS SHOWN IN FIG. 34.

4.20.6 SHOWER UNIT. A SHOWER SPRAY UNIT WITH A HOSE AT LEAST 60" (1525mm) LONG THAT CAN BE USED BOTH AS A FIXED SHOWER HEAD AND AS A HAND–HELD SHOWER SHALL BE PROVIDED.

4.20.7 BATHTUB ENCLOSURES. IF PROVIDED, ENCLOSURES FOR BATHTUBS SHALL NOT OBSRTUCT CONTROLS OR TRANSFER FROM WHEELCHAIRS ONTO BATHTUB SEATS OR INTO TUBS. ENCLOSURES ON BATHTUBS SHALL NOT HAVE TRACKS MOUNTED ON THEIR RIMS.

4.21 SHOWER STALLS.

4.21.1* GENERAL. ACCESSIBLE SHOWER STALLS SHALL COMPLY WITH 4.21.

4.21.2 SIZE & CLEARANCE. EXCEPT AS SPECIFIED IN 9.1.2, SHOWER STALL SIZE AND CLEAR FLOOR SPACE SHALL COMPLY WITH FIG. 34(a) OR (b). THE SHOWER STALL IN FIG. 34(a) SHALL BE 36" BY 36" (915mm BY 915mm). THE SHOWER STALL IN FIG. 34(b) WILL FIT INTO THE SPACE REQUIRED FOR A BATHTUB.

4.21.3 SEAT. A SEAT SHALL BE PROVIDED IN SHOWER STALLS 36" BY 36" (915mm BY 915mm). THE SEAT SHALL BE MOUNTED 17" TO 19" (430mm TO 485mm) FROM THE BATHROOM FLOOR AND SHALL EXTEND THE FULL DEPTH OF THE STALL. IN A 36" BY 36" SHOWER STALL, THE SEAT SHALL BE ON THE WALL OPPOSITE THE CONTROLS. WHERE A FIXED SEAT IS PROVIDED IN A 30" BY 60" MINIMUM SHOWER STALL, IT SHALL BE A FOLDING TYPE AND SHALL BE MOUNTED ON THE WALL ADJACENT TO THE CONTROLS. THE STRUCTURAL STRENGTH OF SEATS AND THEIR ATTACHMENTS SHALL COMPLY WITH 4.26.3.

4.21.4 GRAB BARS. GRAB BARS COMPLYING WITH 4.26 SHALL BE PROVIDED AS SHOWN IN FIG. 34.

4.21.5 CONTROLS. FAUCETS AND OTHER CONTROLS COMPLYING WITH 4.27.4 SHALL BE LOCATED AS SHOWN IN FIG. 34 IN SHOWER STALLS 36" BY 36" (915mm BY 915mm) ALL CONTROLS, FAUCETS, AND THE SHOWER UNIT SHALL BE MOUNTED ON THE SIDE WALL OPPOSITE THE SEAT.

4.21.6 SHOWER UNIT. A SHOWER SPRAY UNIT WITH A HOSE AT LEAST 60" (1525mm) LONG THAT CAN BE USED AS A FIXED SHOWER HEAD OR AS A HAND–HELD SHOWER SHALL BE PROVIDED.

EXCEPTION: IN UNMONITORED FACILITIES WHERE VANDALISM IS A CONSIDERATION, A FIXED SHOWER HEAD MOUNTED AT 48" (1220mm) ABOVE THE SHOWER FLOOR MAY BE USED IN LIEU OF A HAND HELD SHOWER HEAD.

4.21.7 CURBS. IF PROVIDED, CURBS IN SHOWER STALLS 36" BY 36" (915mm BY 915mm) SHALL BE NO HIGHER THAN 1/2" (13mm). SHOWER STALLS THAT ARE 30" BY 60" (760mm BY 1525mm) SHALL NOT HAVE CURBS.

4.21.8 SHOWER ENCLOSURES. IF PROVIDED, ENCLOSURES FOR SHOWER STALLS SHALL NOT OBSTRUCT CONTROLS OR OBSTRUCT TRANSFER FROM WHEELCHAIRS ONTO SHOWER SEATS.

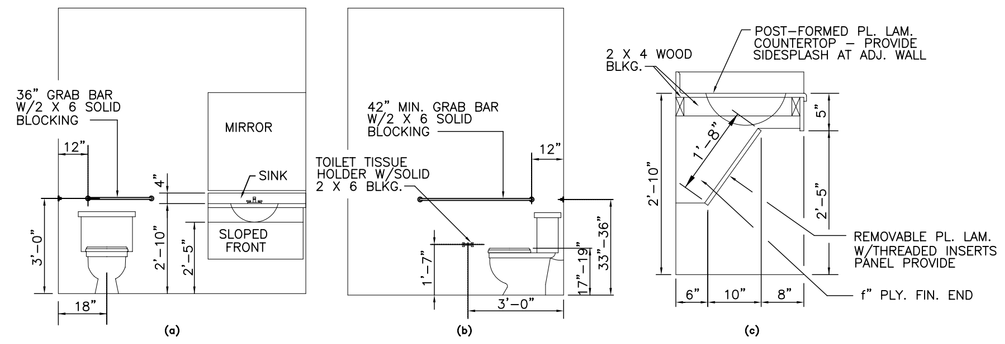

FIG. 31

LAVATORY & WATER CLOSET CLEARANCES

N.T.S.

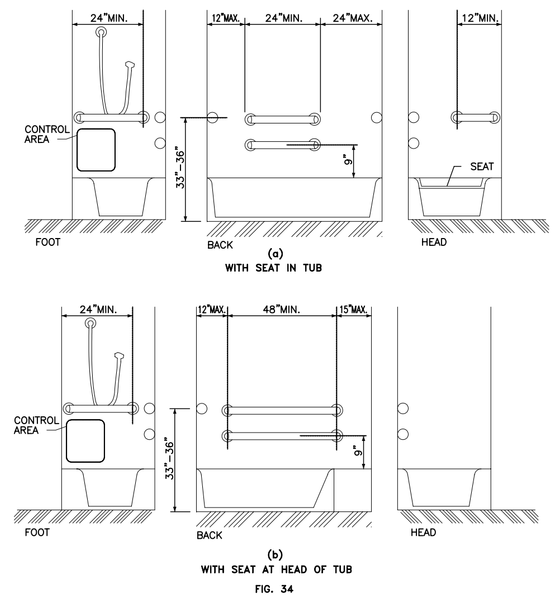

FIG. 34

GRAB BARS AT BATHTUBS

N.T.S.

4.22 TOILET ROOMS.

4.22.1 MINIMUM NUMBER. TOILET FACILITIES REQUIRED TO BE ACCESSIBLE BY 4.1 SHALL COMPLY WITH 4.22. ACCESSIBLE TOILET ROOMS SHALL BE ON AN ACCESSIBLE ROUTE.

4.22.2 DOORS. ALL DOORS TO ACCESSIBLE TOILET ROOMS SHALL COMPLY WITH 4.13. DOORS SHALL NOT SWING INTO THE CLEAR FLOOR SPACE REQUIRED FOR ANY FIXTURE.

4.22.3 CLEAR FLOOR SPACE. THE ACCESSIBLE FIXTURES AND CONTROLS REQUIRED IN 4.22.4, 4.22.5, 4.22.6, AND 4.22.7 SHALL BE ON AN ACCESSIBLE ROUTE. AN UNOBSRTUCTED TURNING SPACE COMPLYING WITH 4.2.3 SHALL BE PROVIDED WITHIN AN ACCESSIBLE TOILET ROOM. THE CLEAR FLOOR SPACE AT FIXTURES AND CONTROLS, THE ACCESSIBLE ROUTE, AND THE TURNING SPACE MAY OVERLAP.

EXCEPTION: IN TOILET ROOMS WITH ONLY ONE WATER CLOSET AND ONE LAVATORY, A CLEAR FLOOR SPACE OF 30" BY 60" (815mm BY 1525mm) MAY BE USED IN LIEU OF THE UNOBSTRUCTED TURNING SPACE.

4.22.4 WATER CLOSETS. IF TOILET STALLS ARE PROVIDED, THEN AT LEAST ONE SHALL COMPLY WITH 4.17 ITS WATER CLOSET SHALL COMPLY WITH 4.16. IF WATER CLOSETS ARE NOT IN STALLS, THEN AT LEAST ONE SHALL COMPLY WITH 4.16.

4.22.5 URINALS. IF URINALS ARE PROVIDED, THEN AT LEAST ONE SHALL COMPLY WITH 4.18.

4.22.6 LAVATORIES AND MIRRORS. IF LAVATORIES AND MIRRORS ANR PROVIDED, THEN AT LEAST ONE OF EACH SHALL COMPLY WITH 4.19.

4.22.7 CONTROLS AND DISPENSERS. IF CONTROLS, DISPENSERS, RECEPTACLES, OR OTHER EQUIPMENT IS PROVIDED, THEN AT LEAST ONE OF EACH SHALL BE ON AN ACCESSIBLE ROUTE AND SHALL COMPLY WITH 4.27.

4.23 BATHROOM, BATHING FACILITIES, AND SHOWER ROOMS.

4.23.1 MINIMUM NUMBER. BATHROOMS, BATHING FACILITIES, OR SHOWER ROOMS REQUIRED TO BE ACCESSIBLE BY 4.1 SHALL COMPLY WITH 4.23 AND SHALL BE ON AN ACCESSIBLE ROUTE. FOR ADAPTABLE BATHROOMS IN ACCESSIBLE DWELLING UNITS, SEE 4.34.5.

4.23.2 DOORS. DOORS TO ACCESSIBLE BATHROOMS SHALL COMPLY WITH 4.13. DOORS SHALL NOT SWING INTO THE FLOOR SPACE REQUIRED FOR ANY FIXTURE.

4.23.3 CLEAR FLOOR SPACE. THE ACCESSIBLE FIXTURES AND CONTROLS REQUIRED IN 4.23.4, 4.23.5, 4.23.6, 4.23.7, 4.23.8, AND 4.23.9 SHALL BE ON AN ACCESSIBLE ROUTE. AN UNOBSTRUCTED TURNING SPACE COMPLYING WITH 4.2.3 SHALL BE PROVIDED WITHIN AN ACCESSIBLE BATHRROM. THE CLEAR FLOOR SPACES AT FIXTURES AND CONTROLS, THE ACCESSIBLE ROUTE AND THE TURNING SPACE MAY OVERLAP.

EXCEPTION: IN BATHROOMS WITH ONLY ONE WATER CLOSET, ONE LAVATORY, AND ONE BATHTUB OR SHOWER A CLEAR FLOOR SPACE OF 30" BY 60" (760mm BY 1525mm) MAY BE USED IN LIEU OF THE UNOBSTRUCTED TURNING SPACE.

4.23.4 WATER CLOSETS. IF TOILET STALLS ARE PROVIDED, THEN AT LEAST ONE SHALL COMPLY WITH 4.17 ITS WATER CLOSET SHALL COMPLY WITH 4.16. IF WATER CLOSETS ARE NOT IN STALLS, THEN AT LEAST ONE SHALL COMPLY WITH 4.6.

4.23.5 URINALS. IF URINALS ARE PROVIDED, THEN AT LEAST ONE SHALL COMPLY WITH 4.18.

4.23.6 LAVATORIES AND MIRRORS. IF LAVATORIES AND MIRRORS ARE PROVIDED, THEN AT LEAST ONE OF EACH SHALL COMPLY WITH 4.19.

4.23.7 CONTROLS AND DISPENSERS. IF CONTROLS, DISPENSERS, RECEPTACLES, OR OTHER EQUIPMENT IS PROVIDED, THEN AT LEAST ONE OF EACH SHALL BE ON AN ACCESSIBLE ROUTE AND SHALL COMPLY WITH 4.27.

4.23.8 BATHING AND SHOWER FACILITIES. IF TUBS, OR SHOWERS ARE PROVIDED, THEN AT LEAST ONE ACCESSIBLE TUB THAT COMPLIES WITH 4.20 OR AT LEAST ONE ACCESSIBLE SHOWER THAT COMPLIES WITH 4.21 SHALL BE PROVIDED.

4.23.9* MEDICINE CABINETS. IF MEDICINE CABINETS ARE PROVIDED, AT LEAST ONE SHALL BE LOCATED WITH A USEABLE SHELF NO HIGHER THAN 44" (1120mm) ABOVE THE FLOOR SPACE. THE FLOOR SPACE SHALL COMPLY WITH 4.2.4.

4.24 SINKS.

4.24.1 GENERAL. SINKS REQUIRED TO BE ACCESSIBLE BY 4.1 SHALL COMPLY WITH 4.24, SINKS IN KITCHENS OF ACCESSIBLE DWELLING UNITS SHALL COMPLY WITH 4.34.6.5.

4.24.2 HEIGHT. SINKS SHALL BE MOUNTED WITH THE COUNTER OR RIM NO HIGHER THAN 34" (865mm) FROM THE FINISHED FLOOR (SEE FIG. 31).

4.24.3 KNEE CLEARANCE. KNEE CLEARANCE THAT IS AT LEAST 27" (685mm) HIGH, 30" (760mm) WIDE, AND 19" (485mm) DEEP SHALL BE PROVIDED UNDERNEATH SINKS.

4.23.4 DEPTH. EACH SINK SHALL BE A MAXIMUM OF 6–1/2" (165mm) DEEP.

4.23.5 CLEAR FLOOR SPACE. A CLEAR FLOOR SPACE AT LEAST 30" BY 48" (760mm BY 1220mm) COMPLYING WITH 4.2.4 SHALL BE PROVIDED IN FRONT OF A SINK TO ALLOW FORWARD APPROACH HE CLEAR FLOOR SPACE SHALL BE ON AN ACCESSIBLE ROUTE AND SHALL EXTEND A MAXIMUM OF 19" (485mm) UNDERNEATH THE SINK.

4.23.6 EXPOSED PIPES AND SURFACES. HOT WATER AND DRAIN PIPES EXPOSED UNDER SINKS SHALL BE INSULATED OR OTHERWISE COVERED. THERE SHALL BE NO SHARP OR ABRASIVE SURFACES UNDER SINKS.

4.23.7 FAUCETS. FAUCETS SHALL COMPLY WITH 4.27.4. LEVER–OPERATED, PUSH–TYPE, TOUCH–TYPE, OR ELECTRONICAL CONTROLLED MECHANISMS ARE ACCEPTABLE DESIGNS.

4.25 STORAGE.

4.25.1 GENERAL. FIXED STORAGE FACILITIES SUCH AS CABINETS, SHELVES, CLOSETS, AND DRAWERS REQUIRED TO BE ACCESSIBLE BY 4.1 SHALL COMPLY WITH 4.25.

4.25.2 CLEAR FLOOR SPACE. A CLEAR FLOOR SPACE AT LEAST 30" BY 48" (760mm BY 1220mm) COMPLYING WITH 4.2.4 THAT ALLOWS EITHER A FORWARD OR PARALLEL APPROACH BY A PERSON USING A WHEELCHAIR SHALL BE PROVIDED AT ACCESSIBLE STORAGE FACILITIES.

4.25.3 HEIGHT. ACCESSIBLE STORAGE SPACES SHALL BE WITHIN AT LEAST ONE OF THE REACH RANGES SPECIFIED IN 4.2.5 AND 4.2.6. CLOTHES RODS SHALL BE A MAXIMUM OF 54" (1370mm) FROM THE FLOOR.

4.25.4 HARDWARE. HARDWARE FOR ACCESSIBLE STORAGE FACILITIES SHALL COMPLY WITH 4.27.4 TOUCH LATCHES AND U–SHAPED PULLS ARE ACCEPTABLE.

4.26 HANDRAILS, GRAB BARS, AND TUB AND SHOWER SEATS.

4.26.1 GENERAL. ALL HANDRAILS, GRAB BARS, AND TUB AND SHOWER SEATS REQUIRED TO BE ACCESSIBLE BY 4.1, 4.8, OR 4.9 SHALL COMPLY WITH 4.26.

4.26.2* SIZE AND SPACING OF GRAB BARS AND HANDRAILS. THE DIAMETER OR WIDTH OF THE GRIPPING SURFACES OF A HANDRAIL OR GRAB BAR SHALL BE 1 1/4" TO 1 1/2" (32mm TO 38mm) OR THE SHAPE SHALL PROVIDE AN EQUIVALENT GRIPPING SURFACE. IF HANDRAILS OR GRAB BARS ARE MOUNTED ADJACENT TO A WALL, THE SPACE BETWEEN THE WALL AND THE GRAB BAR SHALL BE 1 1/2" (38mm). HANDRAILS MAY BE LOCATED IN A RECESS IF THE RECESS IS A MAXIMUM OF 3" (75mm) DEEP AND EXTENDS AT LEAST 18" (455mm) ABOVE THE TOP OF THE RAIL.

4.26.3 STRUCTRUAL STRENGTH. THE STRUCTRUAL STRENGTH OF GRAB BARS, TUB AND SHOWER SEATS, FASTENERS, AND MOUNTING DEVICES SHALL MEET THE FOLLOWING SPECIFICATIONS:

(1) BENDING STRESS IN A GRAB BAR OR SEAT BY THE APPLICATION OF 250LBF. (1112N) SHALL BE LESS THAN THE ALLOWABLE STRESS FOR THE MATERIAL OF THE GRAB BAR OR SEAT.

(2) SHEAR STRESS INDUCED IN A GRAB BAR OR SEAT BY THE APPLICATION OF 250LBF. (1112N) SHALL BE LESS THAN THE ALLOWABLE SHEAR STRESS FOR THE MATERIAL OF THE GRAB BAR OR SEAT. IF THE CONNECTION BETWEEN THE GRAB BAR OR SEAT AND ITS MOUNTING BRACKET OR OTHER SUPPORT IS CONSIDERED TO BE FULLY RESTRAINED, THEN DIRECT AND TORSIONAL SHEASR STRESSES SHALL BE TOTALED FOR THE COMBINED SHEAR STRESS WHICH SHALL NOT EXCEED THE ALLOWABLE SHEAR STRESS.

(3) SHEAR FORCE INDUCED IN A FASTENER OR MOUNTING DEVICE FROM THE APPLICATION OF 250LBF (1112N) SHALL BE NO LESS THAN THE ALLOWABLE LATERAL LOAD OF EITHER THE FASTENER OR MOUNTING DEVICE OR THE SUPPORTING STRUCTURE WHICHEVER IS THE SMALLER ALLOWABLE LOAD.

(4) TENSILE FORCE INDUCED IN A FASTENER BY A DIRECT TENSION FORCE OF 250LBF. (1112N) PLUS THE MAXIMUM MOMENT FROM THE APPLICATION OF 250LBF. (1112N) SHALL BE LESS THAN THE ALLOWABLE WITHDRAWAL AND THE SUPPORING STRUCTURE.

(5) GRAB BARS SHALL NOT ROTATE WITHIN THEIR FITTINGS.

4.26.4 ELIMINATING HAZARDS. A HANDRAIL OR GRAB BAR AND ANY WALL OR OTHER SURFACE ADJACENT TO IT SHALL BE FREE OF ANY SHARP OR ABRASIVE ELEMENTS. EDGES SHALL HAVE A MINIMUM RADIUS OF 1/8" (32mm).

4.27 CONTROLS AND OPERATING MECHANISMS.

4.27.1 GENERAL. CONTROLS AND OPERATING MECHANISMS REQUIRED TO BE ACCESSIBLE BY 4.1 SHALL COMPLY WITH 4.27.

4.27.2 CLEAR FLOOR SPACE. CLEAR FLOOR SPACE COMPLYING WITH 4.2.4 THAT ALLOWS A FORWARD OR A PARALLEL APPROACH BY A PERSON USING A WHEELCHAIR SHALL BE PROVIDED AT CONTROLS, DISPENSERS, RECEPTACLES, AND OTHER OPERABLE EQUIPMENT.

4.27.3* HEIGHT. THE HIGHEST OPERABLE PART OF ALL CONTROLS, DISPENSERS, RECEPTACLES, AND OTHER OPERABLE EQUIPMENT SHALL BE PLACED WITHIN AT LEAST ONE OF THE REACH RANGES SPECIFIED IN 4.2.5 AND 4.2.6. EXCEPT WHERE THE USE OF SPECIAL EQUIPMENT DICTATES OTHERWISE, ELECTRICAL AND COMMUNICATIONS SYSTEM RECEPTACLES ON WALLS SHALL BE MOUNTED NO LESS THAN 15" (380mm) ABOVE THE FLOOR.

4.27.4 OPERATION. CONTROLS AND OPERATING MECHANISMS SHALL BE OPERABLE WITH ONE HAND AND SHALL NOT REQUIRE TIGHT GRASPING, PINCHING, OR TWISTING OF THE WRIST. THE FORCE REQUIRED TO ACTIVATE CONTROLS SHALL BE NO GREATER THAN 5 LBF (22.2N).

4.28 ALARMS.

4.28.1 GENERAL. ALARM SYSTEMS REQUIRED TO BE ACCESSIBLE BY 4.1 SHALL COMPLY WITH 4.28.

4.28.2 AUDIBLE ALARMS. IF PROVIDED, AUDIBLE EMERGENCY ALARMS SHALL PRODUCE A SOUND THAT EXCEEDS THE PREVAILING EQUIVALENT SOUND LEVEL IN THE ROOM OR SPACE BY AT LEAST 15 DECIBELS OR EXCEEDS ANY MAXIMUM SOUND LEVEL WITH A DURATION OF 30 SECONDS BY 5 DECIBELS, WHICHEVER IS LOUDER. SOUND LEVELS FOR ALARM SIGNALS SHALL NOT EXCEED 120 DECIBELS.

4.28.3 VISUAL ALARMS. IF PROVIDED, ELECTRICALLY POWERED INTERNALLY ILLUMINATED EMERGENCY EXIT SIGNS SHALL FLASH AS A VISUAL EMERGENCY ALARM IN CONJUNCTION WITH AUDIBLE EMERGENCY ALARMS. THE FLASHING FREQUENCY OF VISUAL ALARM DEVICES SHALL BE LESS THAN 5HZ. IF SUCH ALARMS USE ELECTRICITY FROM THE BUILDING AS A POWER SOURCE THEN THEY SHALL BE INSTALLED ON THE SAME SYSTEM AS THE AUDIBLE EMERGENCY ALARMS.

EXCEPTIONS:

(1) VISUAL ALARM DEVICES THAT ARE MOUNTED ADJACENT TO EMERGENCY EXIT SIGNS MAY BE USED IN LIEU OF FLASHING EXIT SIGNS.

(2) SPECIALIZED SYSTEMS UTILIZING ADVANCED TECHNOLOGY MAY BE SUBSTITUTED FOR THE VISUAL SYSTEMS SPECIFIED ABOVE IF EQUIVALENT PROTECTION IF AFFORDED HANDICAPPED USERS OF THE BUILDING OR FACILITY.

4.28.4 AUXILIARY ALARMS. ACCESSIBLE SLEEPING ACCOMMODATIONS SHALL HAVE A VISUAL ALARM CONNECTED TO THE BUILDING EMERGENCY ALARM SYSTEM OR SHALL HAVE A STANDARD 110–VOLT ELECTRICAL RECEPTACLE INTO WHICH SUCH AN ALARM COULD BE CONNECTED. INSTRUCTIONS FOR USE OF THE AUXILIARY ALARM OR CONNECTION SHALL BE PROVIDED.

4.29 TACTILE WARNINGS.

4.29.1 GENERAL. TACTILE WARNINGS REQUIRED TO BE ACCESSIBLE BY 4.1 SHALL COMPLY WITH 4.29.

4.29.2* TACTILE WARNINGS ON WALKING SURFACES. (RESERVED).

4.29.3* TACTILE WARNINGS ON DOORS TO HAZARDOUS AREAS. (RESERVED)

4.29.4 TACTILE WARNINGS AT STAIRS. (RESERVED)

4.29.5* TACTILE WARNINGS AT HAZARDOUS VEHICULAR AREAS. (RESERVED)

4.29.6* TACTILE WARNINGS AT REFLECTING POOLS. (RESERVED)

4.29.7* STANDARDIZATION. TEXTURED SURFACES FOR TACTILE DOOR WARNINGS SHALL BE STANDARD WITHIN A BUILDING, FACILITY, SITE, OR COMPLEX OF BUILDINGS.

4.30 SIGNAGE.

4.30.1 GENERAL. SIGNAGE REQUIRED TO BE ACCESSIBLE BY 4.1 SHALL COMPLY WITH 4.30.

4.30.2 CHARACTER PROPORTION. LETTERS AND NUMBERS ON SIGNS SHALL HAVE A WIDTH TO–HEIGHT RATIO BETWEEN 3:5 AND 1:1 AND A STROKE WIDTH TO–HEIGHT RATIO BETWEEN 1:5 AND 1:10.

4.30.3* COLOR CONTRAST. CHARACTERS AND SYMBOLS SHALL CONTRAST WITH THEIR BACKGROUND–EITHER LIGHT CHARACTERS ON A DARK BACKGROUND OR DARK CHARACTERS ON A LIGHT BACKGROUND.

4.30.4* RAISED OR INDENTED CHARACTERS OR SYMBOLS. LETTERS AND NUMBERS ON SIGNS SHALL BE RAISED 1/32" MINIMUM AND SHALL BE SANS SERIF CHARACTERS. RAISED CHARACTERS OR SYMBOLS SHALL BE AT LEAST 5/8" (16mm) HIGH, BUT NO HIGHER THAN 2" (50mm). INTENDED CHARACTERS OR SYMBOLS SHALL HAVE A STROKE WIDTH OF AT LEAST 1/4" (6mm). SYMBOLS OR PICTOGRAPHS ON SIGNS SHALL BE RAISED OR INDENTED 1/32" MINIMUM.

4.30.5 SYMBOLS OF ACCESSIBILITY. ACCESSIBLE FACILITIES REQUIRED TO BE IDENTIFIED BY 4.1 SHALL USE THE INTERNATIONAL SYMBOL OF ACCESSIBILITY. THE SYMBOL SHALL BE DISPLAYED AS SHOWN IN FIG. 43.

4.30.6 MOUNTING LOCATION AND HEIGHT. INTERIOR SIGNAGE SHALL BE LOCATED ALONGSIDE THE DOOR ON THE LATCH SIDE AND SHALL BE MOUNTED AT A HEIGHT OF BETWEEN 54" AND 66" (1370mm AND 1675mm) ABOVE THE FINISHED FLOOR.

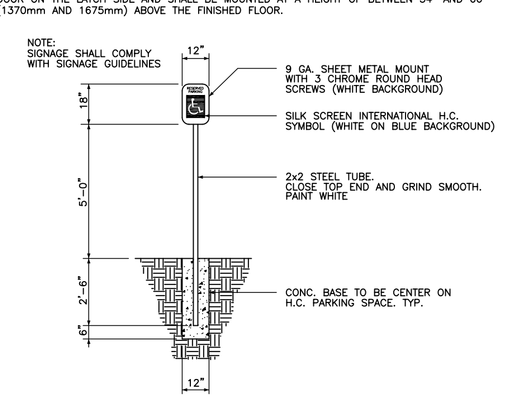

EXTERIOR HANDICAP SIGN

N.T.S.

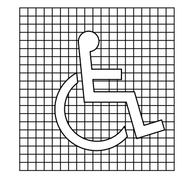

(a)
PROPORTIONS

(b)
DISPLAY CONDITIONS

FIG. 43

INTERNATIONAL SYMBOL OF ACCESSIBILITY

N.T.S.

4.31 TELEPHONES.

4.31.1 GENERAL. PUBLIC TELEPHONES REQUIRED TO BE ACCESSIBLE BY 4.1 SHALL COMPLY WITH 4.31.

4.31.2 CLEAR FLOOR OR GROUND SPACE. A CLEAR FLOOR OR GROUND SPACE AT LEAST 30" BY 48" (760mm BY 1220mm) THAT ALLOWS EITHER A FORWARD OR PARALLEL APPROACH BY A PERSON USING A WHEELCHAIR SHALL BE PROVIDED AT TELEPHONES. THE CLEAR FLOOR OR GROUND SPACE SHALL COMPLY WITH 4.2.4. BASES, ENCLOSURES, AND FIXED SEATS SHALL NOT IMPEDE APPROACHES TO TELEPHONES BY PEOPLE WHO USE WHEELCHAIRS.

4.31.3* MOUNTING HEIGHT. THE HIGHEST OPERABLE PART OF THE TELEPHONE SHALL BE WITHIN THE REACH RANGES SPECIFIED IN 4.2.5 OR 4.2.6.

4.31.4 PROTRUDING OBJECTS. TELEPHONES SHALL COMPLY WITH 4.4.

4.31.5* EQUIPMENT FOR HEARING IMPAIRED PEOPLE. TELEPHONES SHALL BE EQUIPPED WITH A RECEIVER THAT GENERATES A MAGNETIC FIELD IN THE AREA OF THE RECEIVER CAP. VOLUME CONTROLS SHALL BE PROVIDED IN ACCORDANCE WITH 4.1.2.

4.31.6 CONTROLS. TELEPHONES SHALL HAVE PUSHBUTTON CONTROLS WHERE SERVICE FOR SUCH EQUIPMENT IS AVAILABLE.

4.31.7 TELEPHONE BOOKS. TELEPHONE BOOKS, IF PROVIDED, SHALL BE LOCATED IN A POSITION THAT COMPLIES WITH THE REACH RANGES SPECIFIED IN 4.2.5 AND 4.2.6.

4.31.8 CORD LENGTH. THE CORD FROM THE TELEPHONE TO THE HANDSET SHALL BE AT LEAST 29".

4.32 SEATING, TABLES, AND WORK SURFACES.

4.32.1 MINIMUM NUMBER. FIXED OR BUILT IN SEATING, TABLES, OR WORK