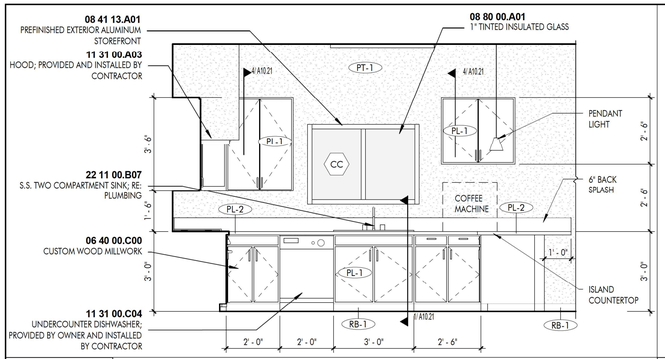

1 ELEVATION - KITCHEN SOUTH
3/8" = 1'-0"

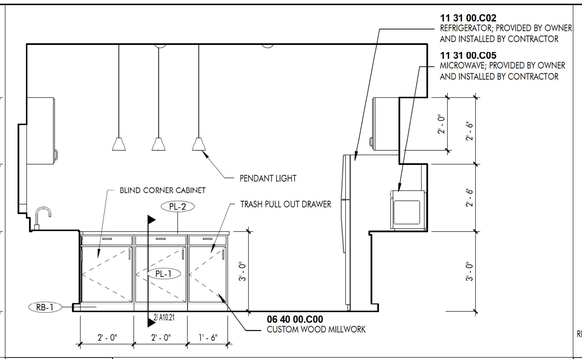

2 ELEVATION - KITCHEN WEST
3/8" = 1'-0"

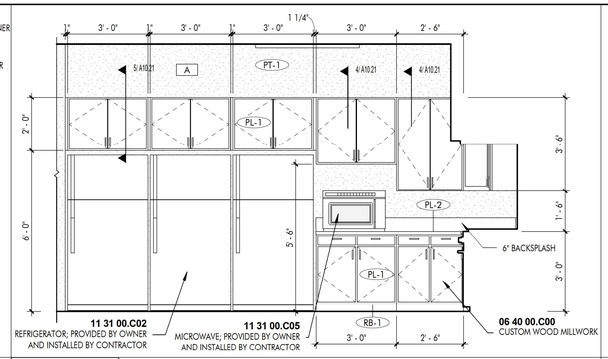

3 ELEVATION - KITCHEN NORTH
3/8" = 1'-0"

LEGEND

PL-1	PLASTIC LAMINATE
RB-1	RUBBER BASE
TB-1	TILE BASE
PT-1	PAINT
GC-1	GRANITE COUNTERTOP

NOTE:
REFER TO FINISH PLAN FOR ALL FINISHES.

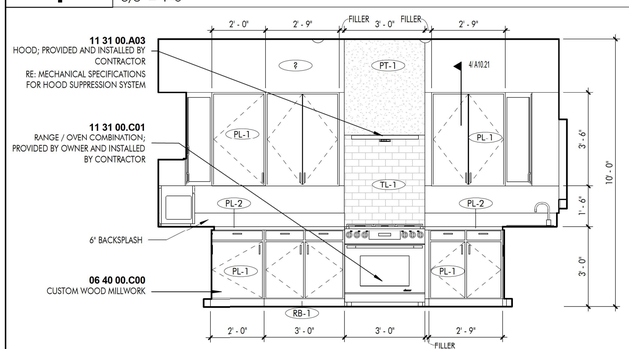

4 ELEVATION - KITCHEN EAST
3/8" = 1'-0"

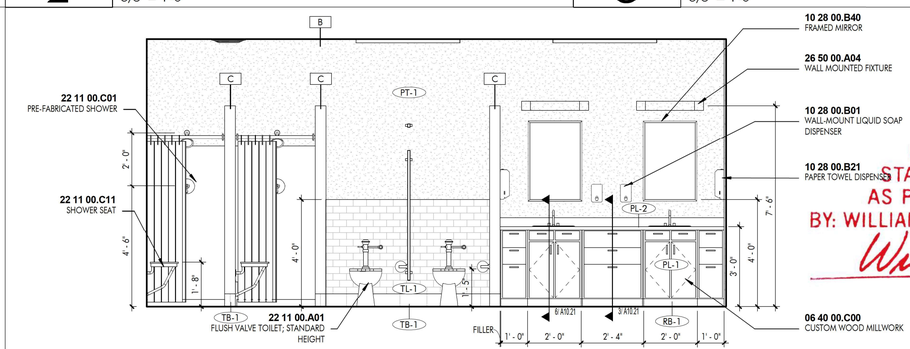

REVIEWED FOR
STATE FIRE MARSHAL
AS PER REVIEW LETTER
BY: WILLIAM D. JONES, ARCHITECT, CBO

5 ELEVATION - SHOWERS EAST
3/8" = 1'-0"

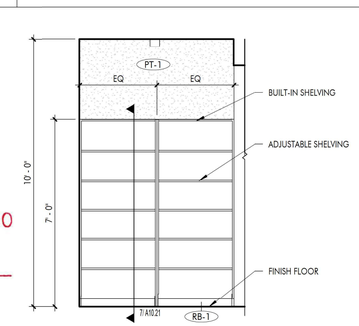

6 ELEVATION - LINEN NORTH
3/8" = 1'-0"

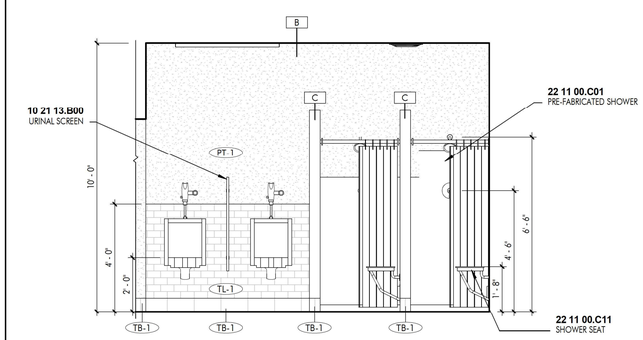

7 ELEVATION - SHOWERS WEST
3/8" = 1'-0"

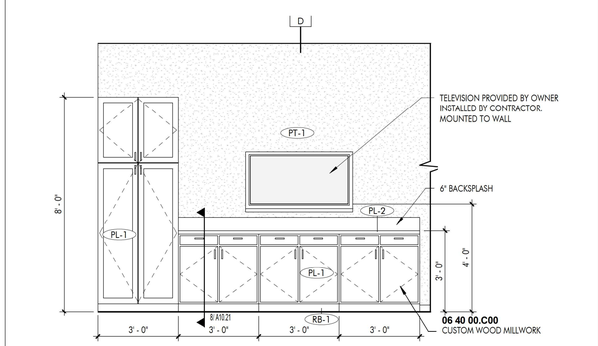

8 ELEVATION - DAY ROOM WEST
3/8" = 1'-0"

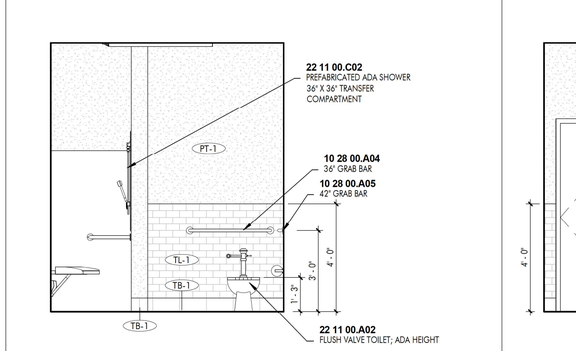

9 ELEVATION - TOILET 105 EAST
3/8" = 1'-0"

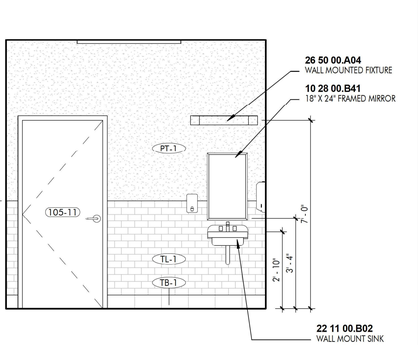

10 ELEVATION - TOILET 105 WEST
3/8" = 1'-0"

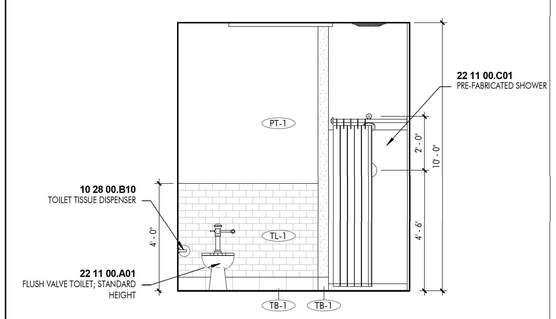

11 ELEVATION - TOILET 120 WEST
3/8" = 1'-0"

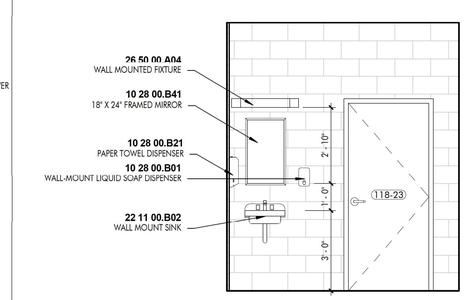

12 ELEVATION - TOILET 120 EAST
3/8" = 1'-0"

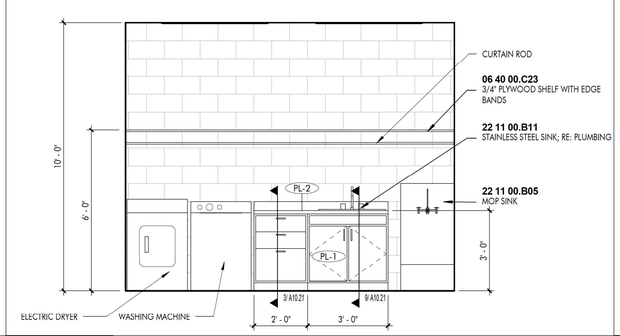

13 ELEVATION - UTILITY SOUTH
3/8" = 1'-0"

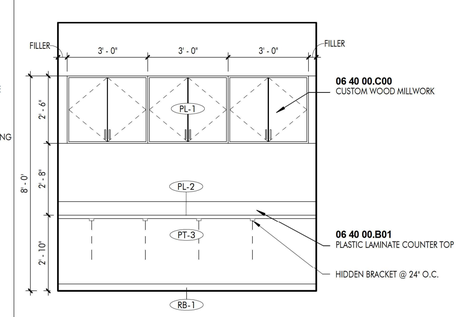

14 ELEVATION - VESTIBULE DESK
3/8" = 1'-0"

DOMAIN ARCHITECTURE APAC
8316 kelwood avenue
baton rouge, la 70806
225.216.3770 ph
- JOINT VENTURE -
greenleaf architects
215 st. ann drive #5
mandeville, la 70471
985.778.2080 ph

These drawings are the property of DOMAIN ARCHITECTURE APAC and GREENLEAF ARCHITECTS and are not to be reproduced in whole or in part. They are only to be used for the project and site specifically identified herein

Scales stated hereon are valid on the original drawings only. Contractor shall carefully review all dimensions and conditions shown and report to the architect any errors, inconsistencies, or omissions discovered.

These plans were prepared in this office under our personal supervision, and to the best of our knowledge comply with state and local codes. We will generally administer construction.

St. Tammany Fire Protection District No. 1
NEW FIRE STATION & HEADQUARTERS BUILDING
522 Robert Blvd. Slidell LA, 70458

mep engineer:
CRUMB ENGINEERING LLC
4609 FAIRFIELD STREET
METAIRIE, LA 70006
504.455.4450

landscape, civil, and structural engineer:
KYLE ASSOCIATES LLC
638 VILLAGE LANE NORTH
MANDEVILLE, LA 70471
985.727.9377

revisions

No.	Description	Date

PROJ. #: C16-0058

date
FEBURARY 23, 2017

sheet
A10.20

FEBURARY 23, 2017