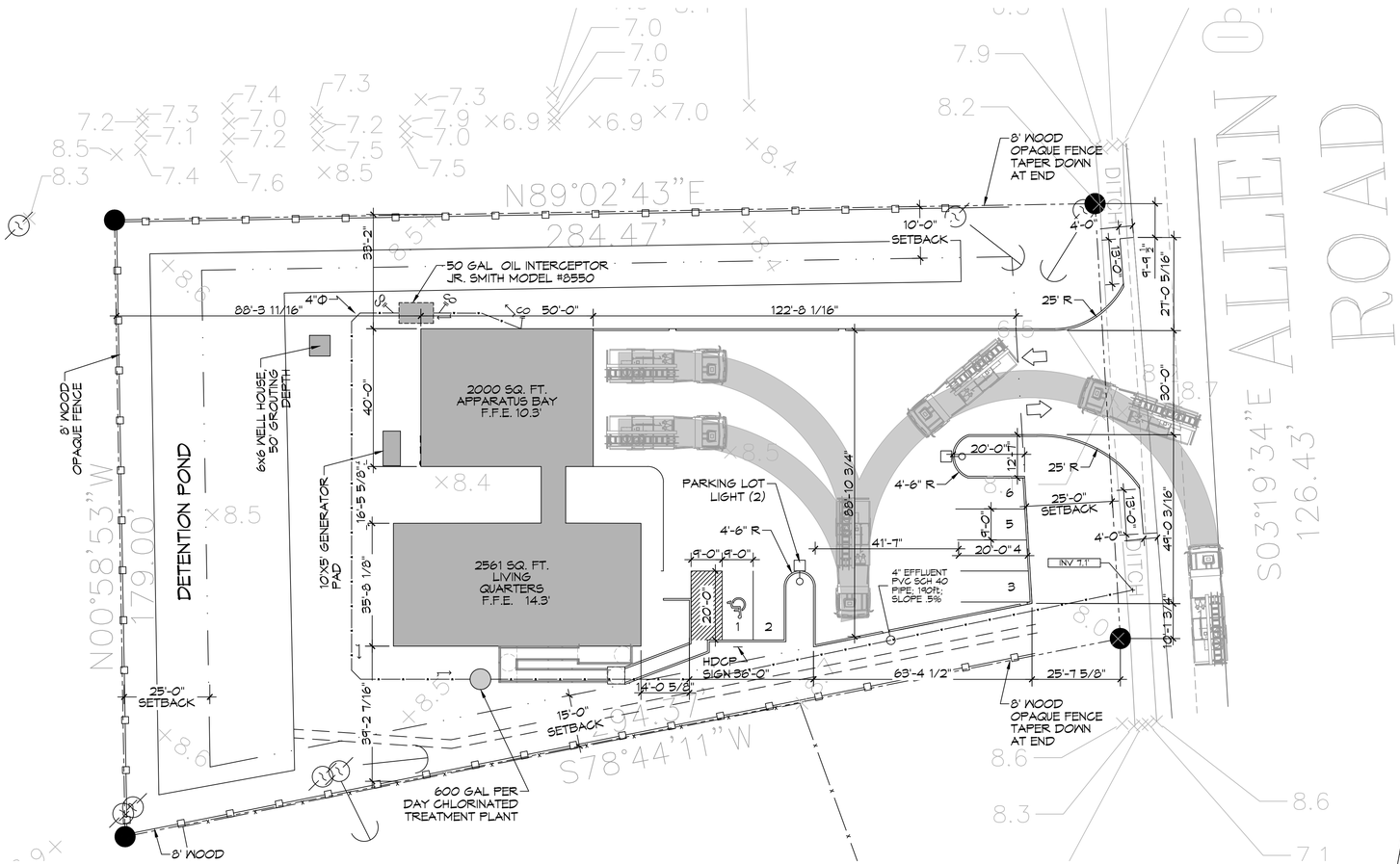

6 SITE PLAN

SCALE: 1" = 20'-0"

OVER ALL SITE PLAN

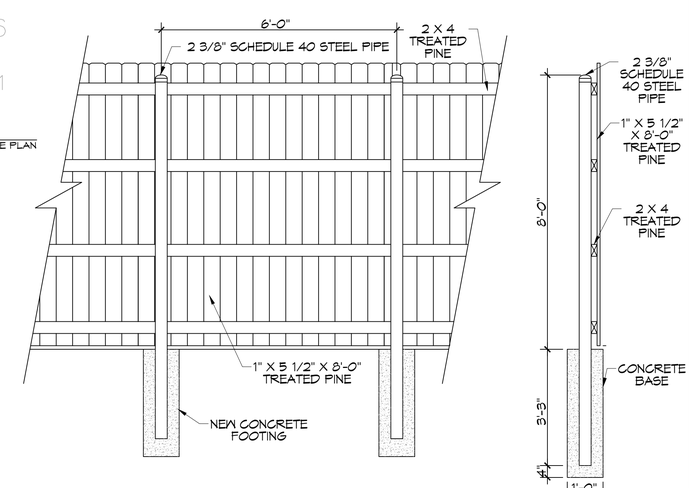

OPAQUE FENCE

SCALE: N.T.S.

PARKING

PROVIDED SPACES: 5 INCLUDING 1 HDCP = 6

PLANING

LOT 29 AND 30
ZONED PF-1 PUBLIC FACILITY

FLOOD ZONE

ZONE "A10"

FINISHED FLOOR ELEVATIONS

APPARATUS BAY F.F.E. = 10.3'

BASE FLOOD ELEVATION FOR LIVING QUARTERS = 13.0'
FINISHED FLOOR ELEVATION FOR LIVING QUARTERS = 14.3'

POTABLE WATER WELL

MINIMUM SUPPLY 5 GPM.
50' GROUTING DEPTH

ONSITE WASTEWATER DISPOSAL

600 GAL PER DAY CHLORINATED TREATMENT PLANT - SEE SPECS.

SITE DRAINAGE

DRAINAGE STUDY AND DESIGN BY J.V. BURKES.

LANDSCAPING

LANDSCAPING DESIGN BY AL BARCIA.

DAMMON ENGINEERING, INC.
LOUISIANA & MISSISSIPPI
www.dammonengineering.com
info@dammonengineering.com
PH: 985.649.5832
Chief Engineer: Brian Mistich, PE
554 Old Spanish Trail
Slidell, LA 70458

#	DESCRIPTION	DATE

REVISIONS

SEAL:

ST. TAMMANY FIRE PROTECTION DISTRICT NO. 1

FIRE STATION 19

51247 ALLEN ROAD
SLIDELL, LOUISIANA 70461

JOB No: 2456
DATE: 05-12-2022
DRAWN BY: CKD
CHECKED BY: JMS

The drawing, specifications, plans, reports and all documents, instruments and forms in any form or medium, prepared or furnished by Dammon Engineering, and all copies thereof shall be copyed property of Dammon Engineering, and shall remain the property of Dammon Engineering, and shall not be used in any way for any purpose unless specifically authorized in writing by Dammon Engineering. Reproduction and other sharing of specifications and plans in whole or in part without written consent of Dammon Engineering is prohibited.

SHEET TITLE:
SITE PLAN

DRAWING NUMBER:
C101

SHEET No: 3 of 29