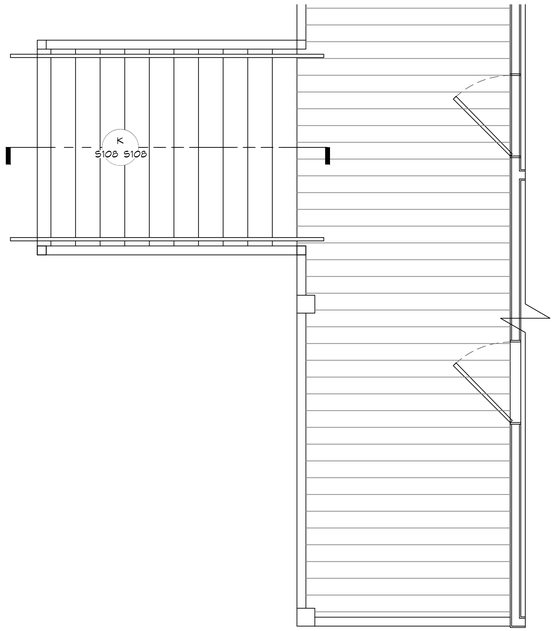

25 BACK PORCH PLAN VIEW
SCALE: 3/8"=1'-0"

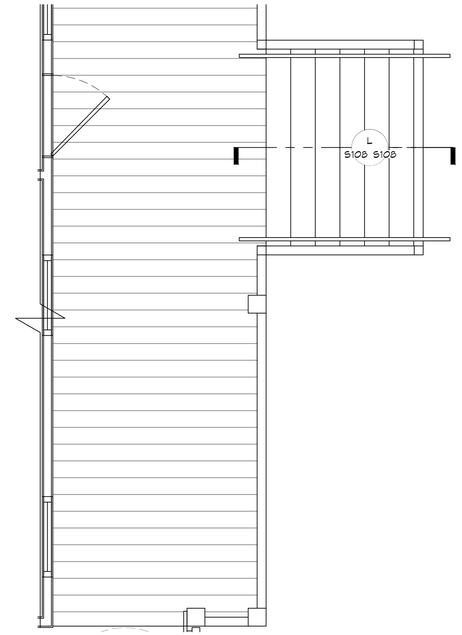

26 FRONT PORCH PLAN VIEW
SCALE: 3/8"=1'-0"

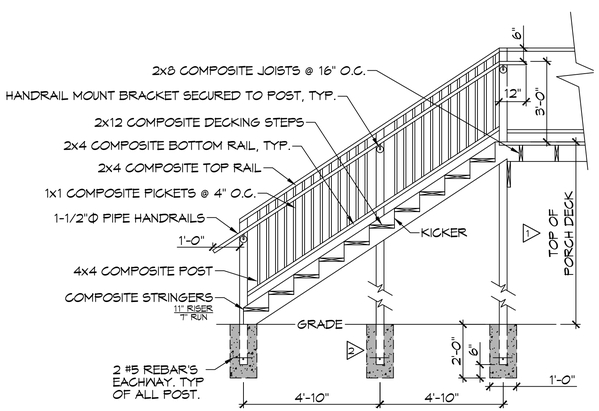

K REAR STAIR SECTION
S108 | S108 SCALE: 3/8" = 1'-0"

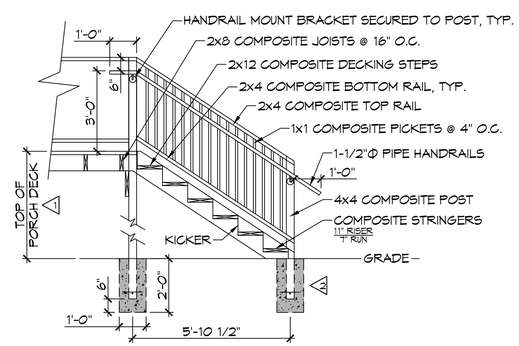

L FRONT STAIR SECTION
S108 | S108 SCALE: 3/8" = 1'-0"

GENERAL NOTES

1. FIELD VERIFY HEIGHT TO MATCH BUILDING
2. 4000 PSI CAST IN PLACE CONCRETE FOOTING

DAMMON ENGINEERING, INC.
LOUISIANA & MISSISSIPPI
www.dammonengineering.com
info@dammonengineering.com
PH: 985.649.5832

Chief Engineer: Brian Mistich, PE
5544 Crooked Creek Trail
Slidell, LA 70458

REVISIONS

#	DESCRIPTION	DATE

SEAL:

STATE OF LOUISIANA
BRIAN A. MISTICH
License No. 30187
PROFESSIONAL ENGINEER

ST. TAMMANY FIRE PROTECTION DISTRICT No. 1

FIRE STATION 19

5104 ALLEN ROAD
SLIDELL, LOUISIANA 70461

JOB No:	2456
DATE:	05-12-2022
DRAWN BY:	CJC
CHECKED BY:	JAS

Not to be used for purposes of bidding, negotiating, or any other purpose without seal by Dammon Engineering, Inc. Dammon Engineering, Inc. retains all rights to the use of its drawings, specifications, and other documents prepared for which, the same have not been paid and developed without written consent of Dammon Engineering, Inc. Dammon Engineering, Inc. retains all rights to the use of its drawings, specifications, and other documents prepared for which, the same have not been paid and developed without written consent of Dammon Engineering, Inc.

SHEET TITLE:
ADA STAIR PLAN

DRAWING NUMBER:
S108

SHEET No: 13 of 29

FILE NAME: J:\- Government\2456 - New Bond Fire Station 19\Drawings\Current Drawings\S108 - ADA Stair Plan.dwg PLOT DATE & TIME: Thursday, May 12, 2022 3:30:06 AM