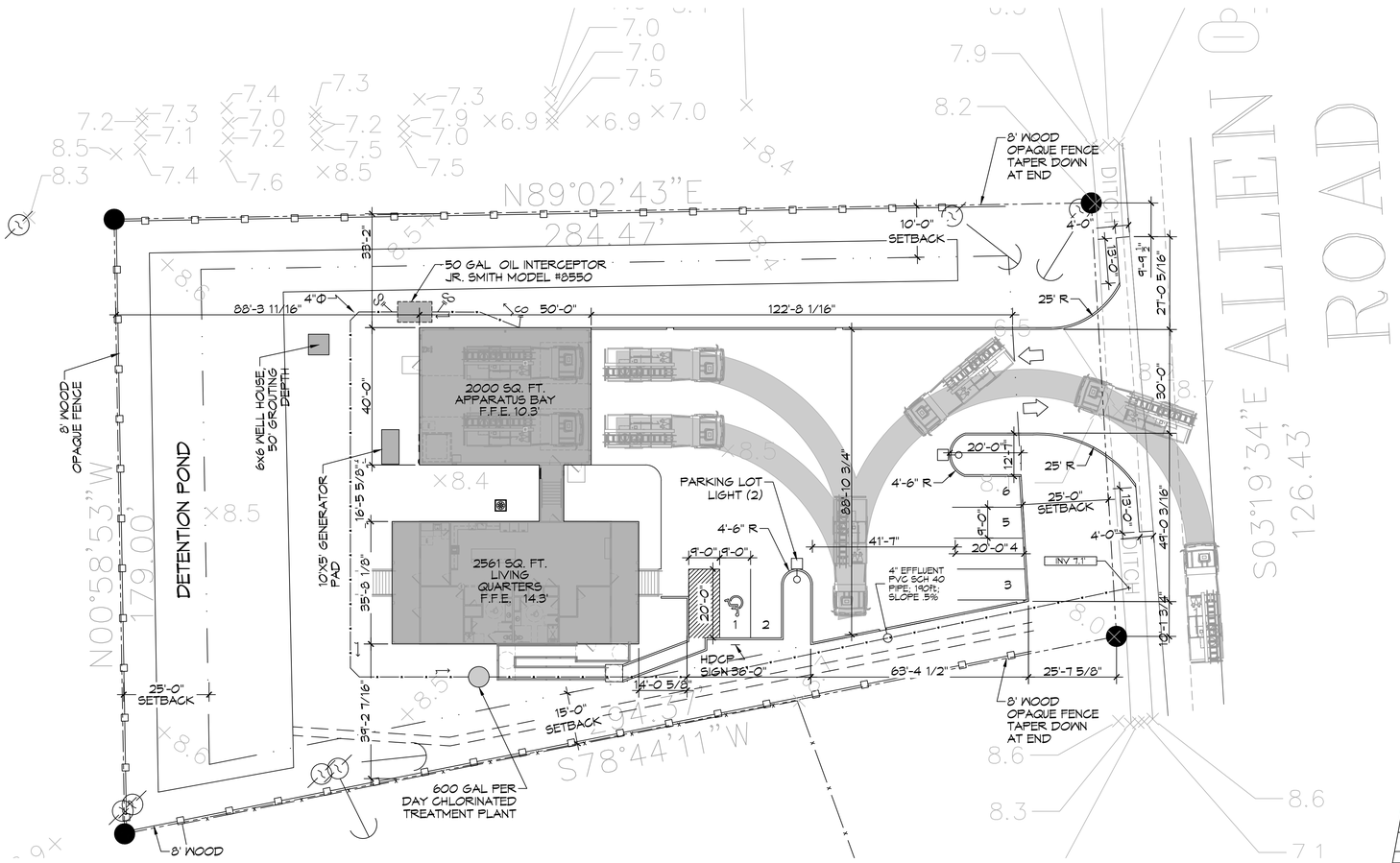

6 SITE PLAN

SCALE: 1" = 20'-0"

OVER ALL SITE PLAN

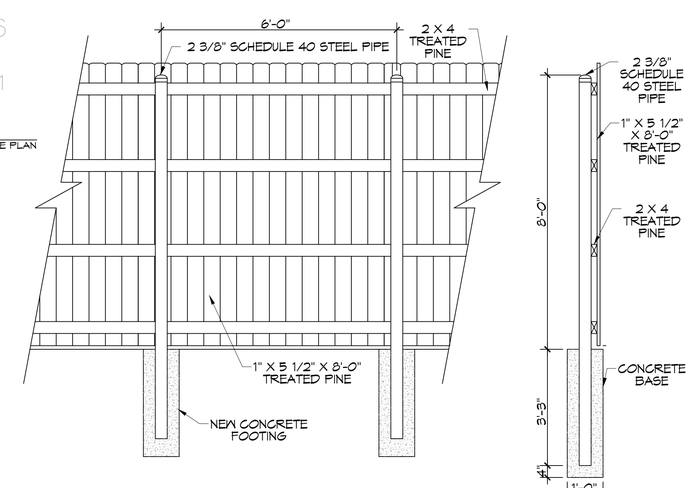

OPAQUE FENCE

SCALE: N.T.S.

PARKING

PROVIDED SPACES: 5 INCLUDING 1 HDCP = 6

PLANING

LOT 29 AND 30
ZONED PF-1 PUBLIC FACILITY

FLOOD ZONE

ZONE "A10"

FINISHED FLOOR ELEVATIONS

APPARATUS BAY F.F.E. = 10.3'

BASE FLOOD ELEVATION FOR LIVING QUARTERS = 13.0'
FINISHED FLOOR ELEVATION FOR LIVING QUARTERS = 14.3'

POTABLE WATER WELL

MINIMUM SUPPLY 5 GPM.
50' GROUTING DEPTH

ONSITE WASTEWATER DISPOSAL

600 GAL PER DAY CHLORINATED TREATMENT PLANT - SEE SPECS.

SITE DRAINAGE

DRAINAGE STUDY AND DESIGN BY J.V. BURKES.

LANDSCAPING

LANDSCAPING DESIGN BY AL BARCIA.

DAMMON ENGINEERING, INC.
LOUISIANA & MISSISSIPPI
www.dammonengineering.com
info@dammonengineering.com
PH: 985.649.5832
Chief Engineer: Brian Mistich, PE
554 Old Spanish Trail
Slidell, LA 70458

#	DESCRIPTION	DATE

REVISIONS

SEAL:

ST. TAMMANY FIRE PROTECTION DISTRICT NO. 1

FIRE STATION 19

5124/7 ALLEN ROAD
SLIDELL, LOUISIANA 70461

JOB No: 2456
DATE: 05-16-2022
DRAWN BY: CKD
CHECKED BY: JMS

The data, drawing, and specifications herein, whole and in segments, constitute original, unpublished, copyrighted instruments of service prepared by Dammon Engineering, and are and shall remain the property of Dammon Engineering, and are not to be used in whole or in part, except with the express written consent of Dammon Engineering. Reproduction of these instruments of service, in whole or in part, without written consent of Dammon Engineering, is prohibited. Reproduction of these drawings or specifications shall not constitute a sale or delivery of the drawings or specifications or any copies thereof.

SHEET TITLE:
SITE PLAN

DRAWING NUMBER:

C101

SHEET No: 3 of 30