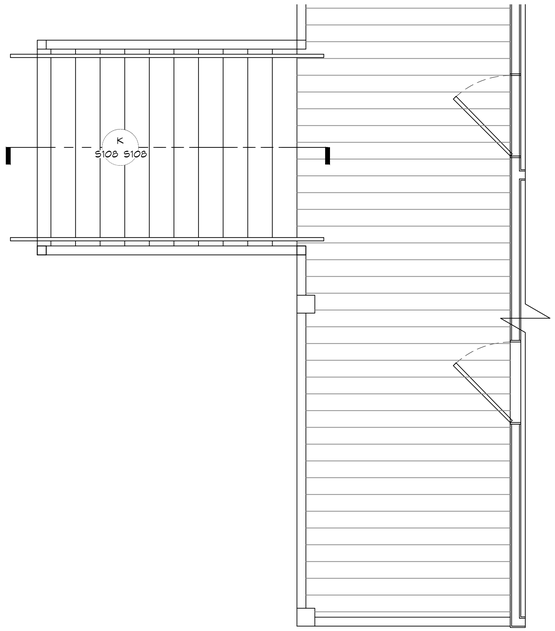

25 BACK PORCH PLAN VIEW
SCALE: 3/8"=1'-0"

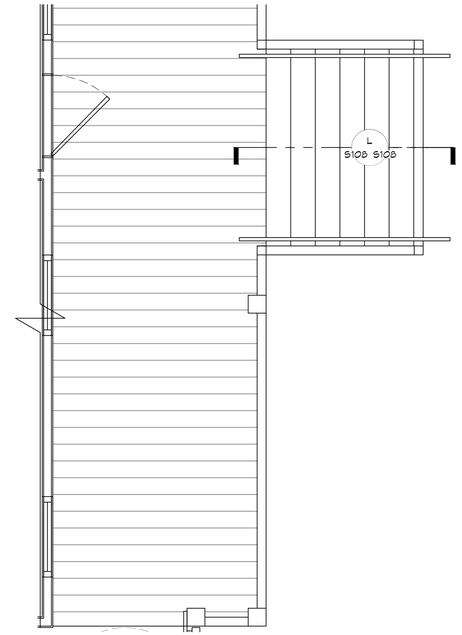

26 FRONT PORCH PLAN VIEW
SCALE: 3/8"=1'-0"

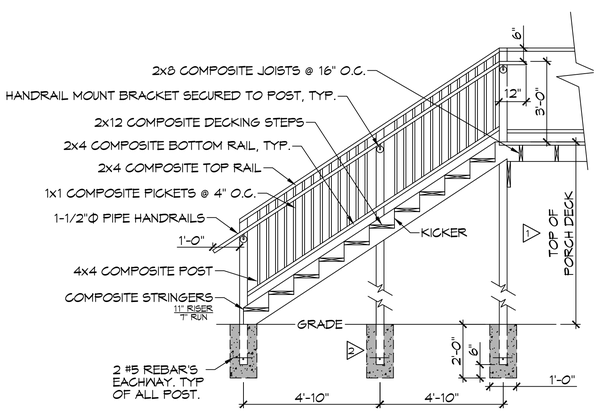

K REAR STAIR SECTION
S108 | S108 SCALE: 3/8" = 1'-0"

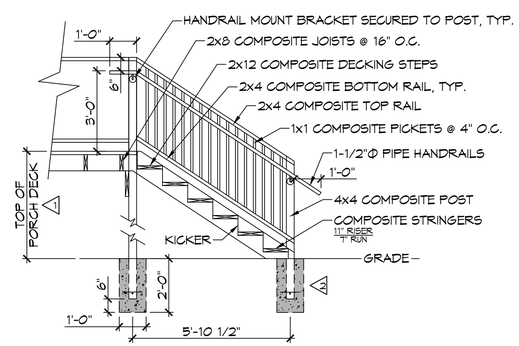

L FRONT STAIR SECTION
S108 | S108 SCALE: 3/8" = 1'-0"

GENERAL NOTES

1. FIELD VERIFY HEIGHT TO MATCH BUILDING
2. 4000 PSI CAST IN PLACE CONCRETE FOOTING

DAMMON ENGINEERING, INC.
LOUISIANA & MISSISSIPPI
www.dammonengineering.com
info@dammonengineering.com
PH: 985.649.5832
Chief Engineer: Brian Mistich, PE
5544 Highway 190 East
Slidell, LA 70458

REVISIONS

#	DESCRIPTION	DATE

SEAL:

STATE OF LOUISIANA
BRIAN A. MISTICH
License No. 30187
PROFESSIONAL ENGINEER

ST. TAMMANY FIRE PROTECTION DISTRICT No. 1

FIRE STATION 19

5704 ALLEN ROAD
SLIDELL, LOUISIANA 70461

JOB No:	2456
DATE:	05-16-2022
DRAWN BY:	CJC
CHECKED BY:	BAM

THIS DRAWING IS THE PROPERTY OF DAMMON ENGINEERING, INC. AND MUST BE RETURNED UPON REQUEST. NO PART OF THIS DRAWING MAY BE REPRODUCED, DISTRIBUTED OR TRANSMITTED IN ANY FORM OR BY ANY MEANS, ELECTRONIC OR MECHANICAL, INCLUDING PHOTOCOPYING, RECORDING, OR ANY INFORMATION STORAGE AND RETRIEVAL SYSTEM, WITHOUT THE PRIOR WRITTEN PERMISSION OF DAMMON ENGINEERING, INC. THE USE OF THIS DRAWING FOR ANY PURPOSE OTHER THAN THE SPECIFIC PROJECT FOR WHICH THE DRAWING WAS PREPARED WITHOUT WRITTEN CONSENT OF DAMMON ENGINEERING, INC. IS PROHIBITED.

SHEET TITLE:
ADA STAIR PLAN

DRAWING NUMBER:
S108

SHEET No: 13 of 30

FILE NAME: J:\- Government\2456 - Allen Road Fire Station 19\Drawings\Current Drawings\S108 - ADA Stair Plan.dwg PLOT DATE & TIME: Monday, May 16, 2022 3:26:48 AM