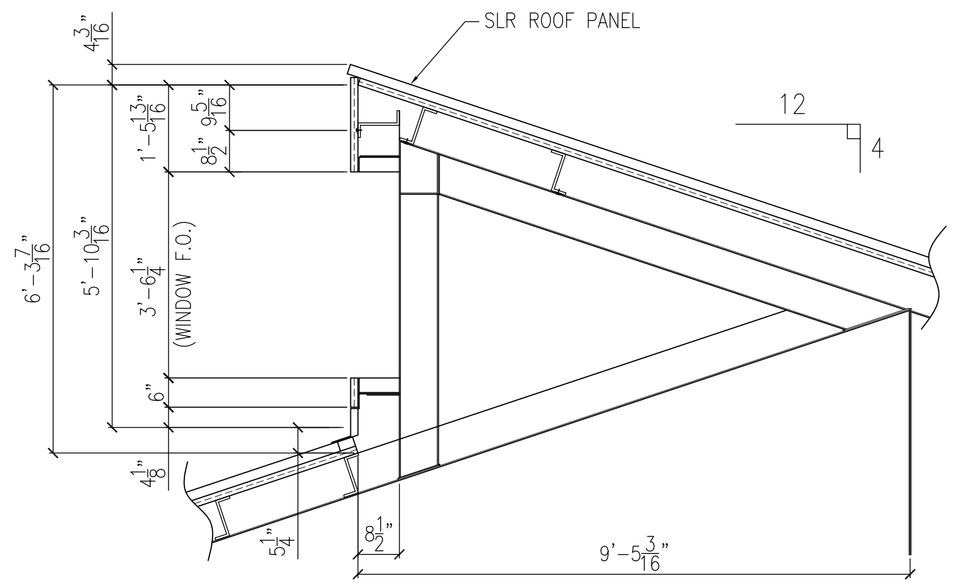

SECTION AT CLERESTORY (D / A1.8)
1/2" = 1'-0"

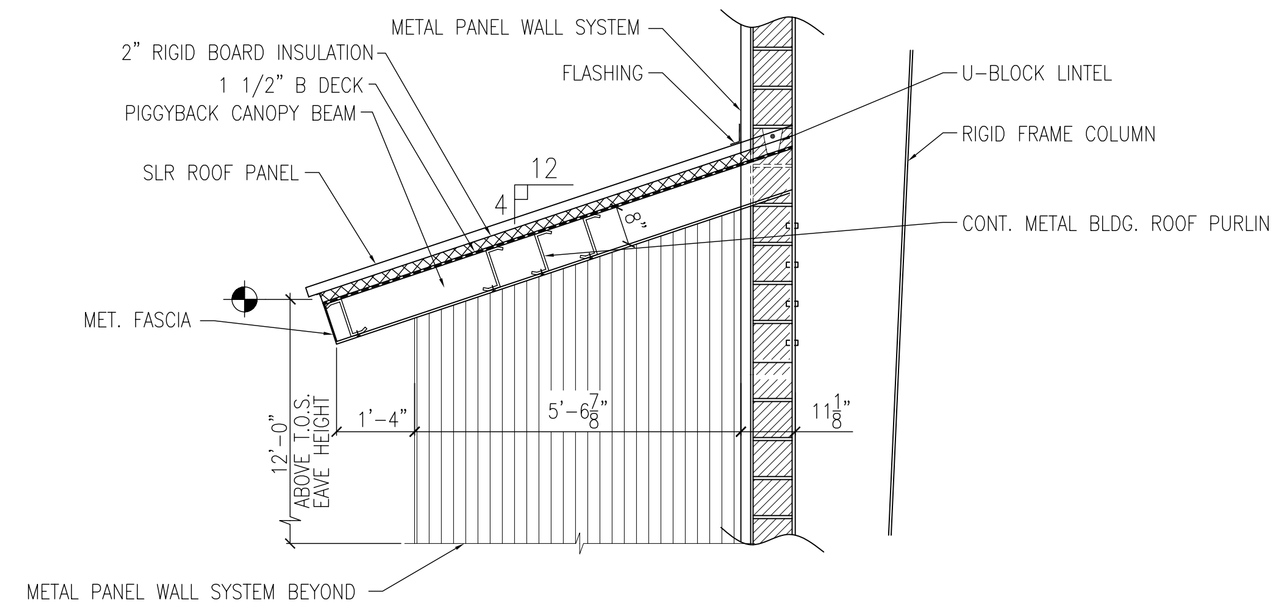

SECTION AT FRONT ENTRACE OVERHANG (E / A1.9)
1/2" = 1'-0"

1/2" = 1'-0"

1' 0 1' 2' 3' 4' 5' 6' 7' 8'

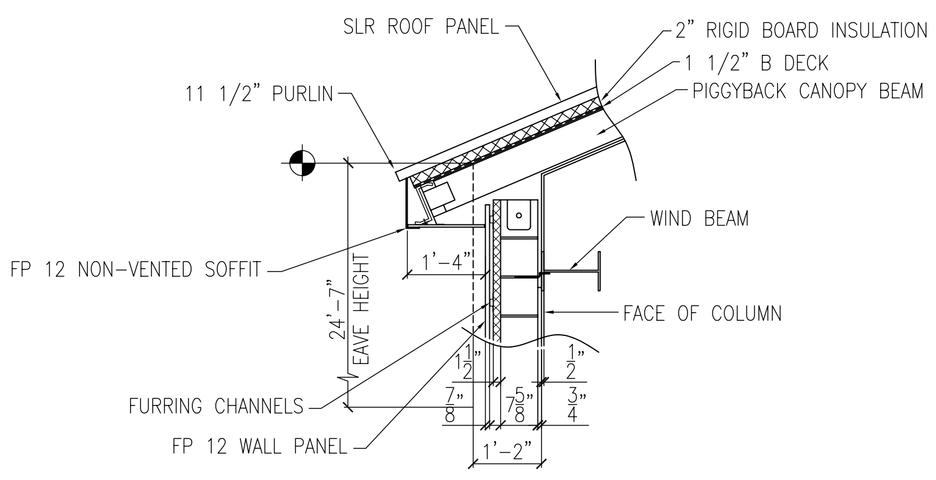

ROOF OVERHANG DETAIL (7 / A1.3)
1/2" = 1'-0"

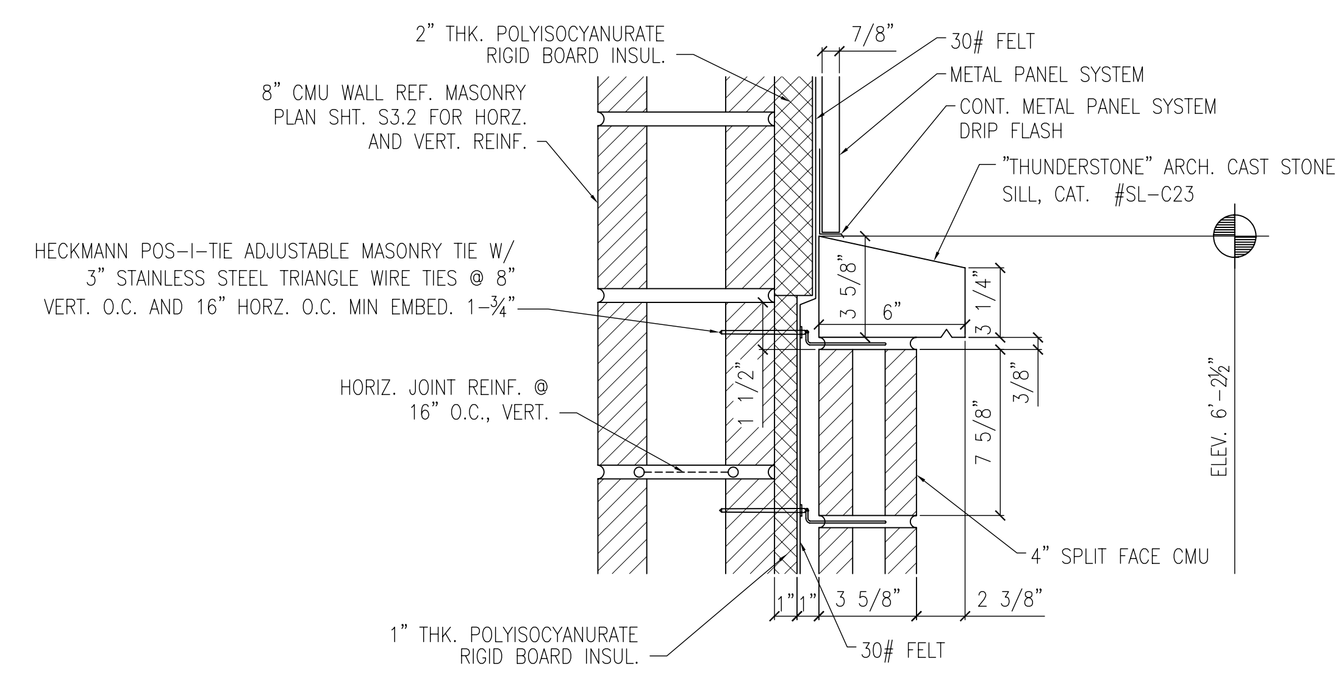

CAST STONE SILL DETAIL (8 / A1.3)
N.T.S.

MKS	DESCRIPTION	DATE	APPR

NAVFAC

DAMMON ENGINEERING, INC.
CHIEF ENGINEER EMMETT DAMMON, P.E. — CHIEF ARCHITECT ROBERT WILTSE
1095 FLORIDA AVENUE
SLIDELL, LA 70458
(985) 649-5832
MAY 15, 2009

EMMETT G. DAMMON, JR. REGISTERED PROFESSIONAL ENGINEER 9652 STATE OF MISSISSIPPI

DES: R. WILTSE | DRW: J. TIFFANY
REVIEWED BY: R. WILTSE
PM/DM: T. ARTRIP
CHIEF ENG/ARCH. P. DAMMON

DEPARTMENT OF THE NAVY
NAVAL FACILITIES ENGINEERING COMMAND
IPT SOUTH ATLANTIC
NAVAL FACILITIES ENGINEERING COMMAND SOUTHEAST
NAVAL AIR STATION JACKSONVILLE
JOHN C. STENNIS SPACE CENTER MISSISSIPPI

SOF RIVERINE AND COMBATANT CRAFT OPERATIONS FACILITY - PRE-FINAL

BLDG. 2440/2441 BUILDING DETAILS

CODE ID. NO. N4412 | SIZE D
SCALE: AS SHOWN
MAXIMO NO. ######
STA. PROJ. NO. P-210
WORK ORDER NO. 510247
CONSTR. CONTR. NO. N62467-05-D-0096
NAVFAC DRAWING NO. ######-##-#-####
SHEET 53 OF 117

A1.23

DRAWFORM REVISION: 01 JAN 2009

REVDATE: