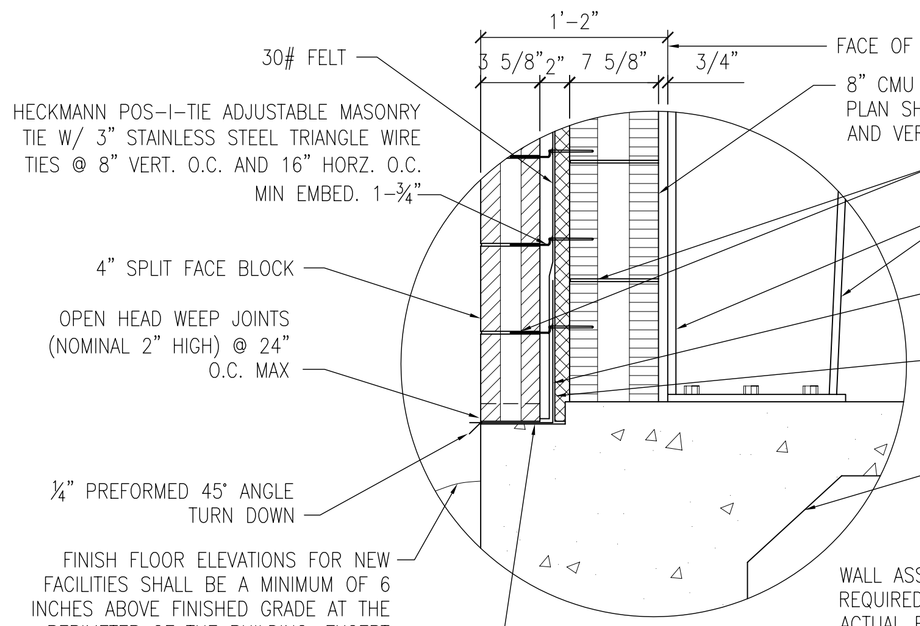

DETAIL 3 / A1.3
N.T.S.

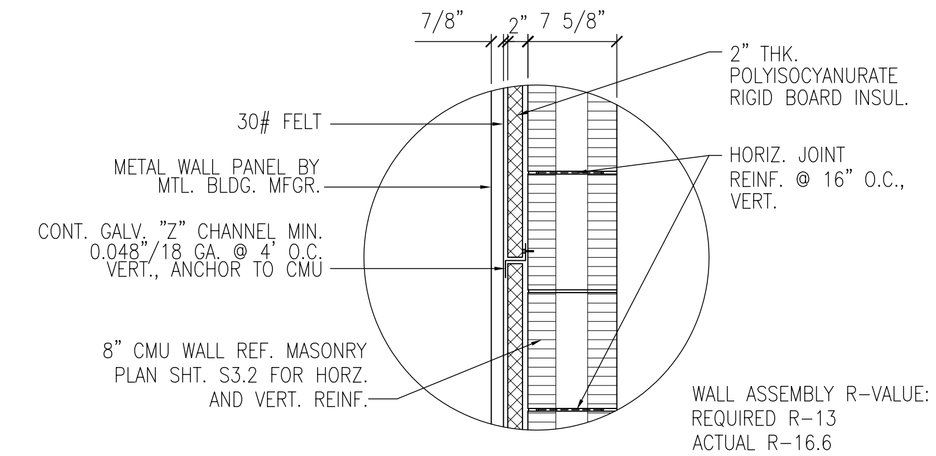

DETAIL 4 / A1.3
N.T.S.

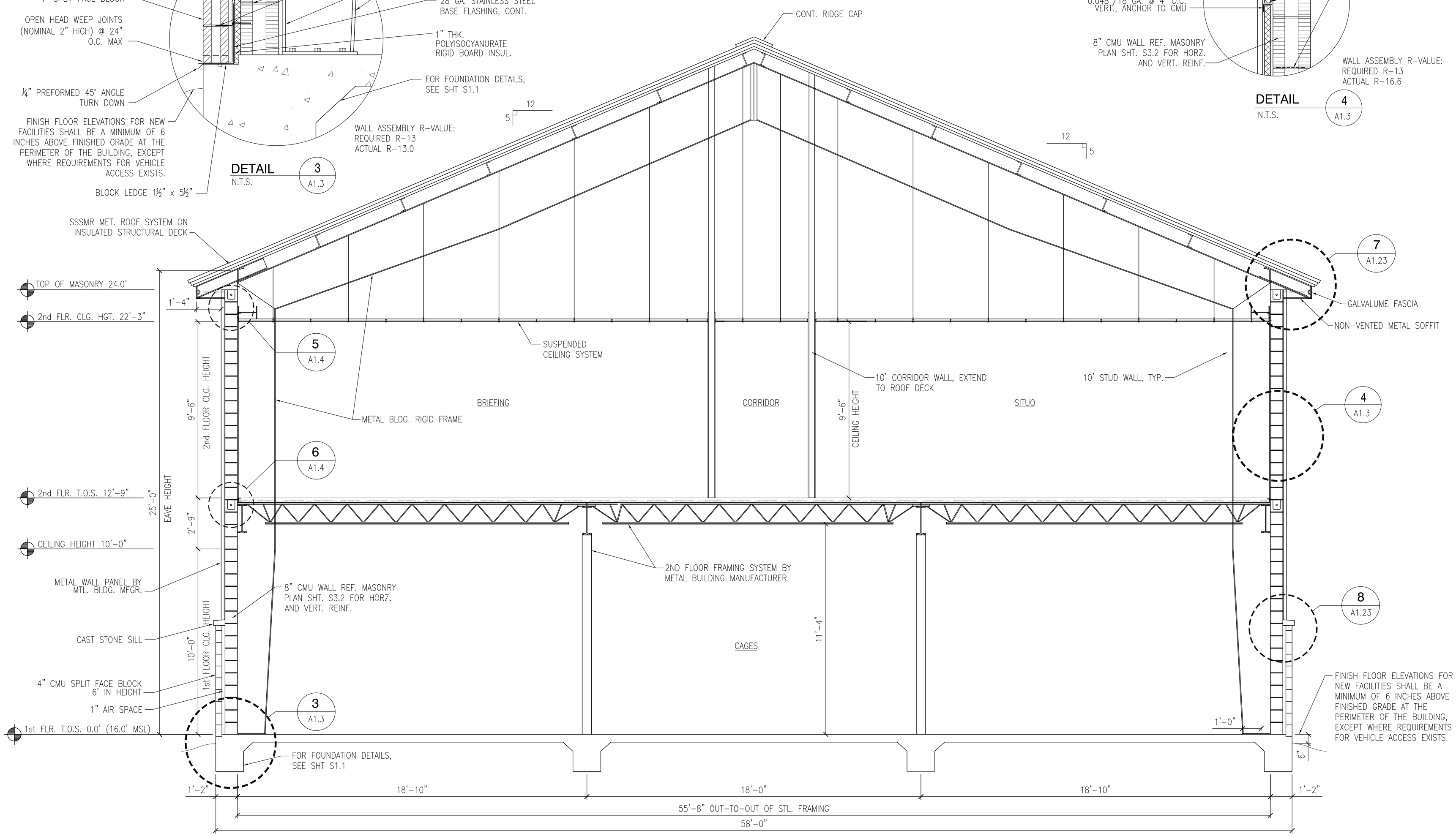

BUILDING 2440 SECTION A
SCALE: 3/8" = 1'-0"
A1.1 A1.2

1' 0 1' 2' 3' 4' 5' 6' 7' 8' 9' 10'

REVDATE:

			APPR
			DATE
			DESCRIPTION
			SYM

NAVFAC

DAMMON ENGINEERING, INC.
CHIEF ENGINEER EMMETT G. DAMMON, P.E.
CHIEF ARCHITECT ROBERT WILTSE
1095 FLORIDA AVENUE
SLIDELL, LA 70458
(985) 649-5832
MAY 15, 2009

EMMETT G. DAMMON, JR. REGISTERED PROFESSIONAL ENGINEER 9652 STATE OF MISSISSIPPI

DES: DRW: J. TIFFANY
REVIEWED BY: R. WILTSE
PM/DM: T. ARTRIP
CHIEF ENG/ARCH. P. DAMMON

DEPARTMENT OF THE NAVY
NAVAL FACILITIES ENGINEERING COMMAND
NAVAL FACILITIES ENGINEERING COMMAND SOUTHEAST
NAVAL AIR STATION JACKSONVILLE
JOHN C. STENNIS SPACE CENTER
MISSISSIPPI
PT SOUTH ATLANTIC

SOF RIVERINE AND COMBATANT CRAFT OPERATIONS FACILITY - PRE-FINAL

OPERATIONS BLDG. 2440 SECTION

CODE ID. NO. N4412 SIZE D
SCALE: AS SHOWN
MAXIMO NO. ######
STA. PROJ. NO. P-210
WORK ORDER NO. 510247
CONSTR. CONTR. NO. N62467-05-D-0096
NAVFAC DRAWING NO. ######-##-#-####
SHEET 33 OF 117

A1.3

DRAWFORM REVISION: 01 JAN 2009