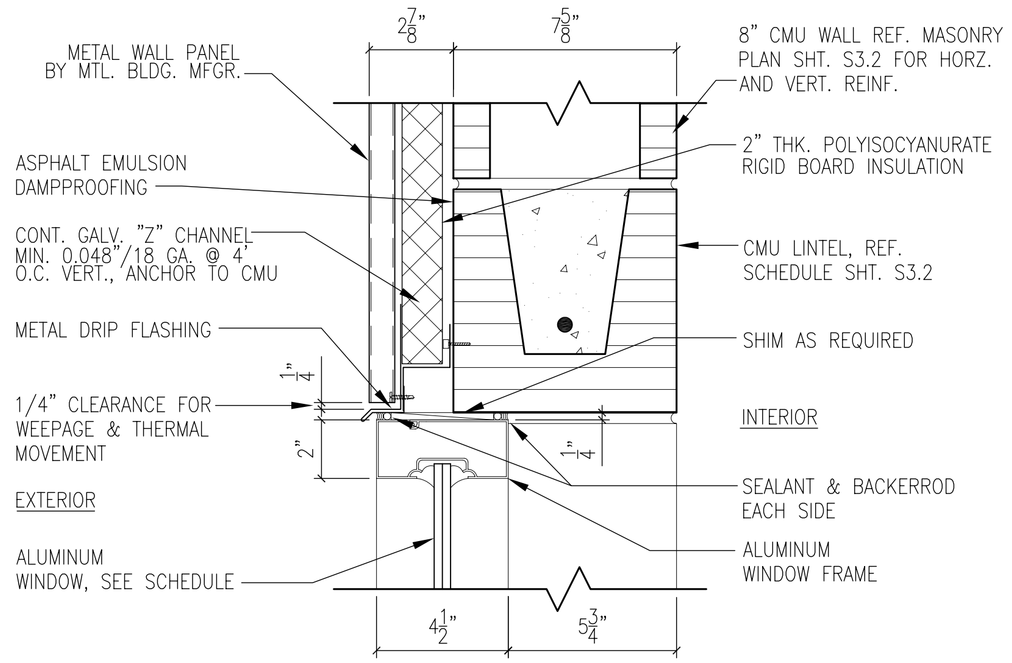

2ND FLOOR EXTERIOR WINDOW HEAD DETAIL (20)

SCALE: 3"= 1'-0" — A1.18

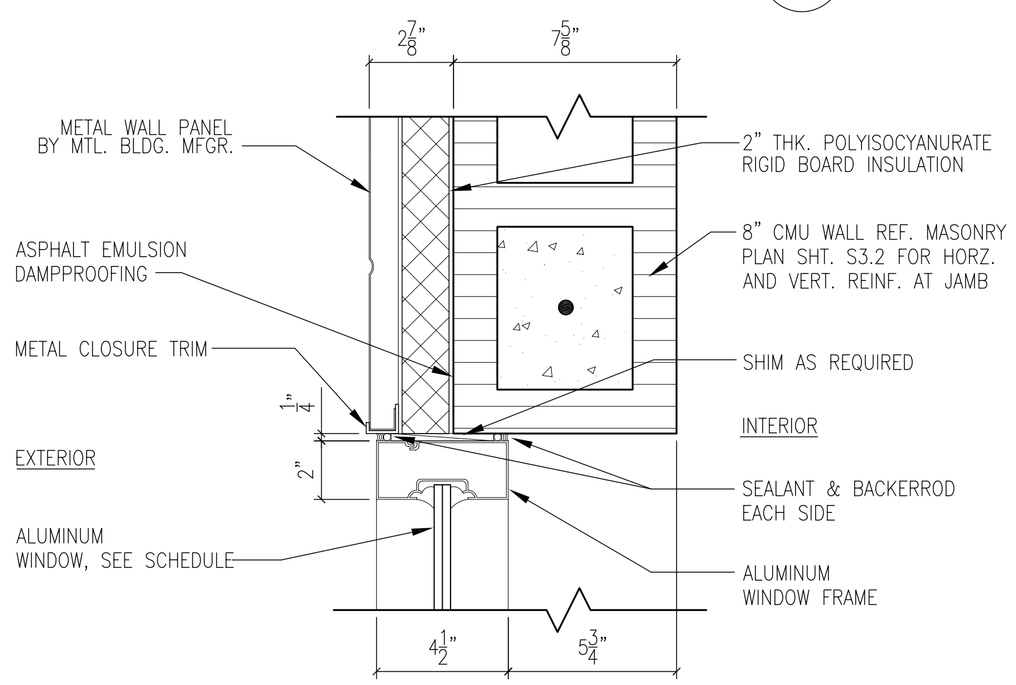

2ND FLOOR EXTERIOR WINDOW JAMB DETAIL (21)

SCALE: 3"= 1'-0" — A1.18

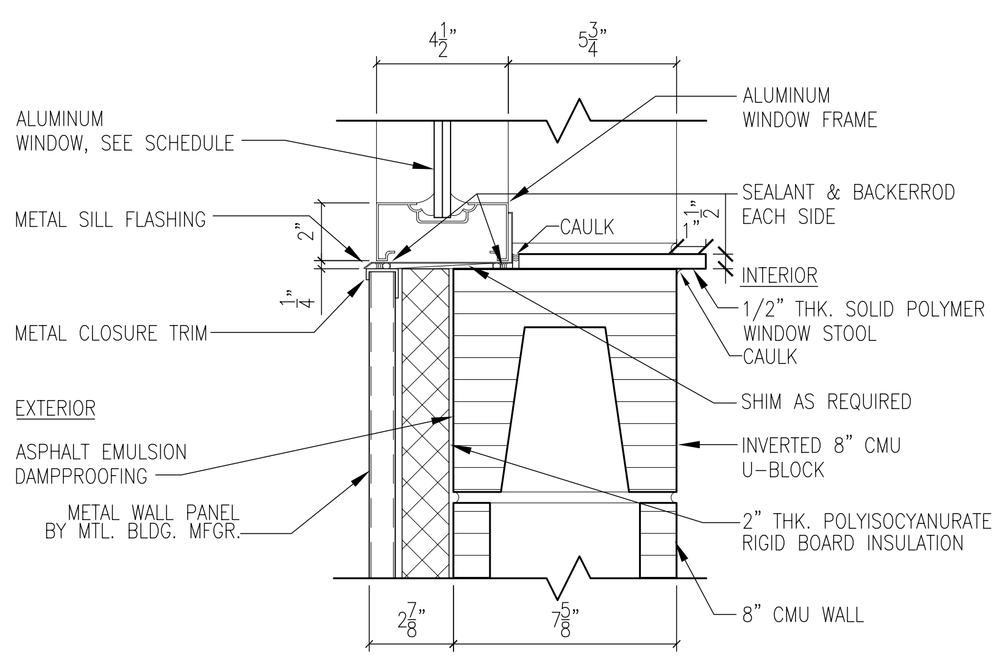

2ND FLOOR EXTERIOR WINDOW SILL DETAIL (22)

SCALE: 3"= 1'-0" — A1.18

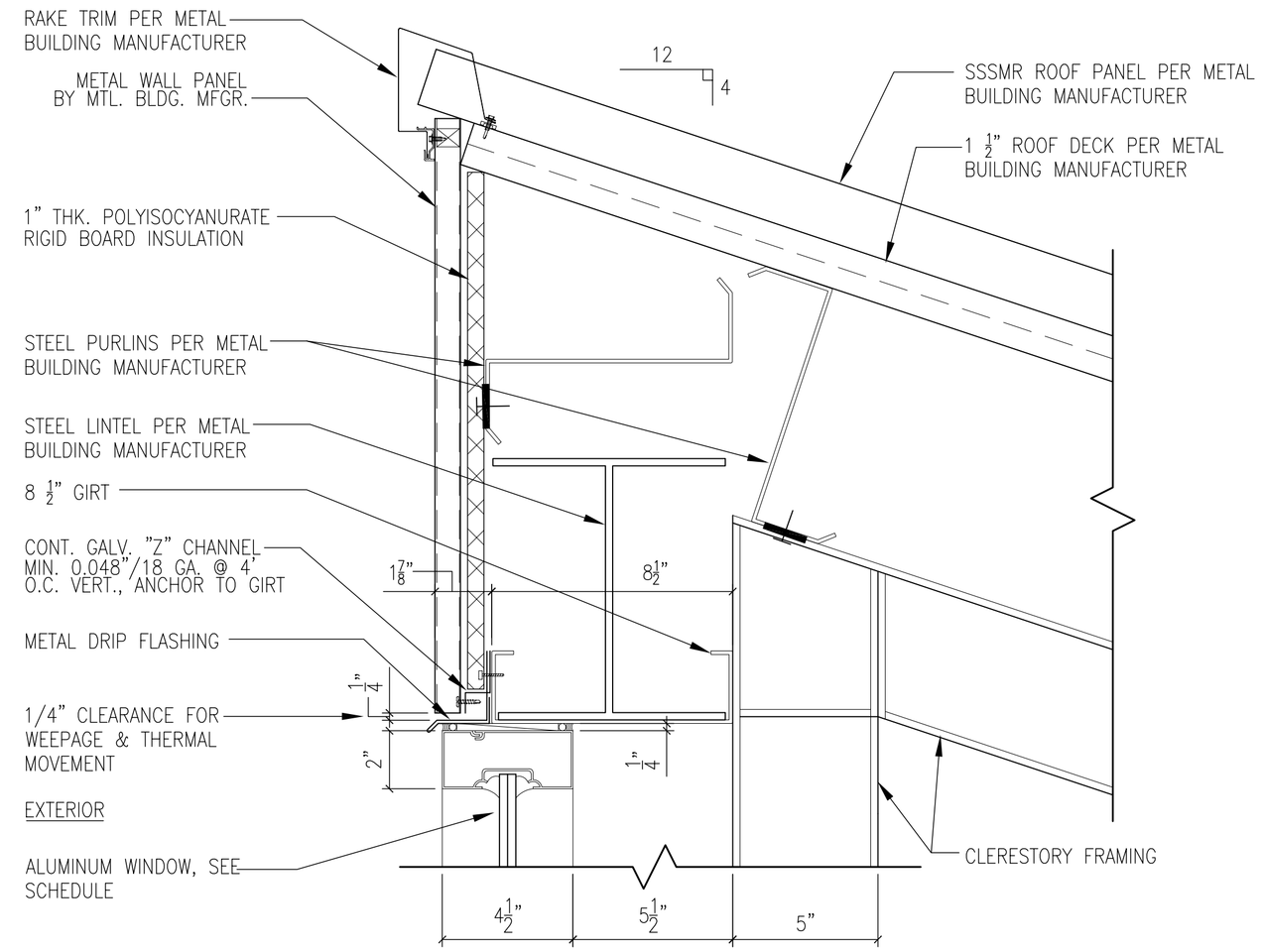

2ND FLOOR-CLERESTORY EXTERIOR WINDOW HEAD DETAIL (23)

SCALE: 3"= 1'-0" — A1.18

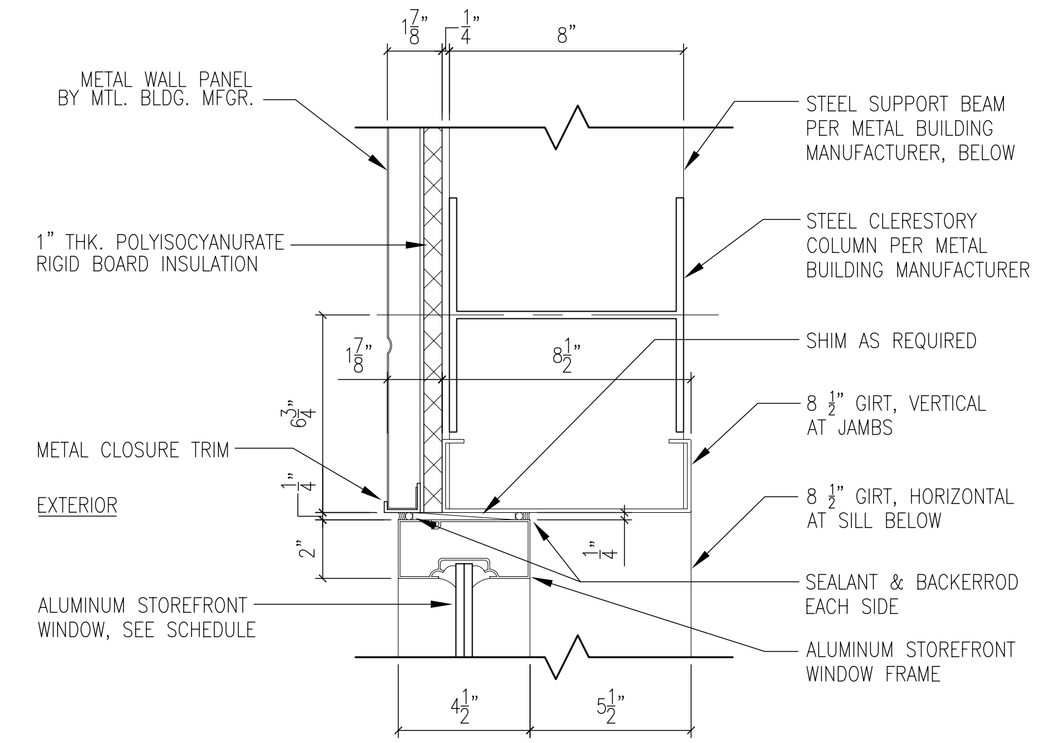

2ND FLOOR-CLERESTORY EXTERIOR WINDOW JAMB DETAIL (24)

SCALE: 3"= 1'-0" — A1.18

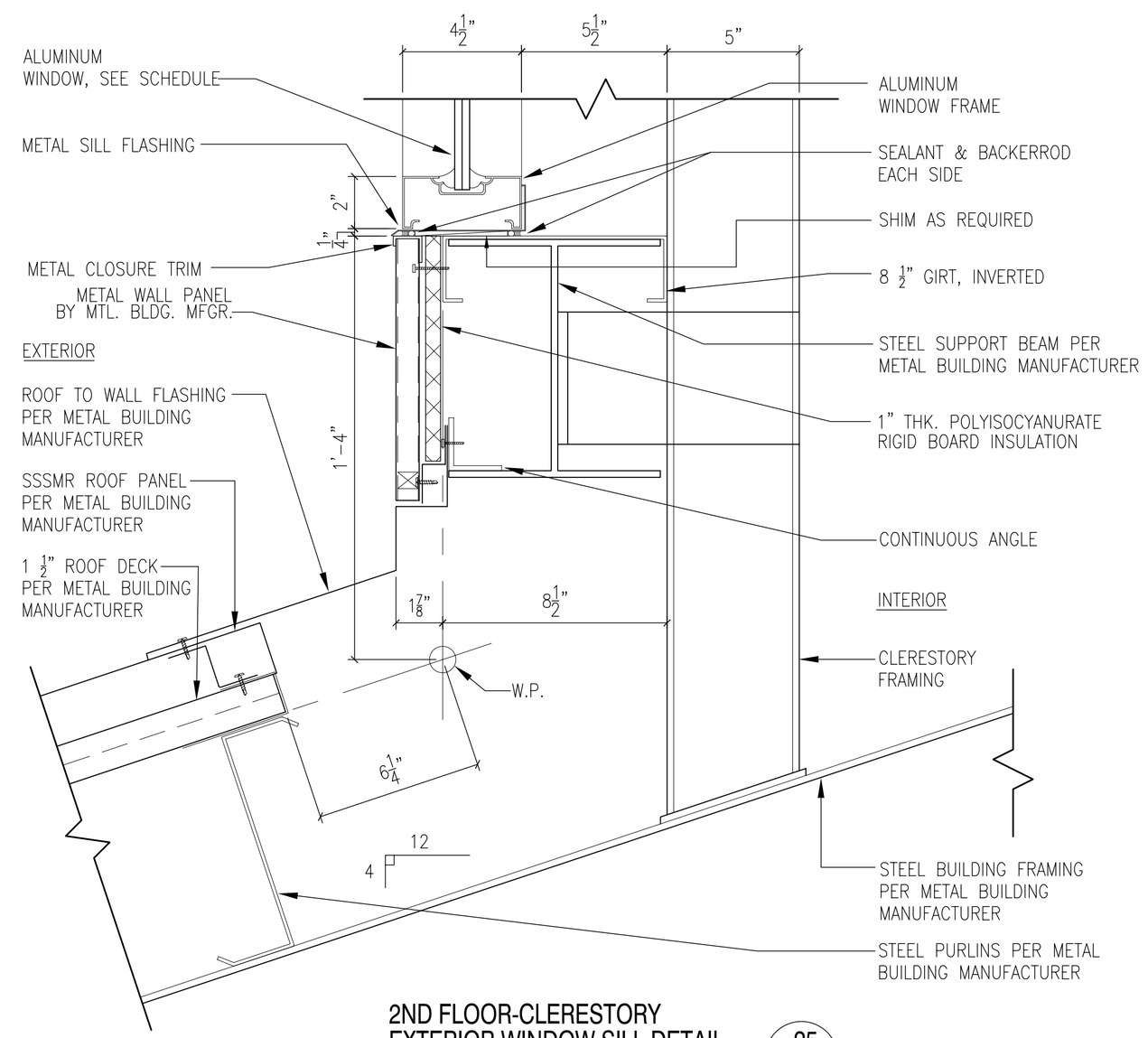

2ND FLOOR-CLERESTORY EXTERIOR WINDOW SILL DETAIL (25)

SCALE: 3"= 1'-0" — A1.18

RECORD DRAWING
LETTER DATED -
5-27-10

ROBERT LEE WILTSE REG. NO. 2728 STATE OF LOUISIANA REGISTERED ARCHITECT

6" 3" 0 1'

STM	DESCRIPTION	DATE	APPR
	AS-BUILT	4-25-10	RW

NAVFAC

DAMMON ENGINEERING, INC.
CHIEF ENGINEER EMMETT G. DAMMON, P.E. — CHIEF ARCHITECT ROBERT WILTSE
1095 FLORIDA AVENUE
SLIDELL, LA 70458
(985) 649-5832
SEPTEMBER 4, 2009

EMMETT G. DAMMON LICENSED PROFESSIONAL ENGINEER 9652 STATE OF MISSISSIPPI

DES: R. WILTSE | DRW: J. TIFFANY
REVIEWED BY: R. WILTSE
PM/DM: T. ARTRIP
CHIEF ENG/ARCH. P. DAMMON

DEPARTMENT OF THE NAVY
NAVAL FACILITIES ENGINEERING COMMAND
IPT GULF COAST — JOHN C. STENNIS SPACE CENTER
NAVAL FACILITIES ENGINEERING COMMAND SOUTHEAST
NAVAL AIR STATION JACKSONVILLE — MISSISSIPPI

SOF RIVERINE AND COMBATANT CRAFT OPERATIONS FACILITY - PRE-FINAL

BLDG. 2440/2441 DOOR DETAILS

CODE ID. NO. N4412	SIZE D
SCALE:	AS SHOWN
MAXIMO NO.	#####
STA. PROJ. NO.	P-210
WORK ORDER NO.	510247
CONSTR. CONTR. NO.	N62467-05-D-0096
NAVFAC DRAWING NO.	15026699
SHEET	52 OF 132

A1.22

DRAWFORM REVISION: 01 JAN 2009

REVDATE: