MATCHLINE SEE SHT C3.1

GENERAL NOTE:
DIMENSIONS SHOWN ARE TO BACK OF CURB (WHERE CURBS ARE SHOWN) OR EDGE OF CONRETE (WHERE CURBS ARE NOT SHOWN).

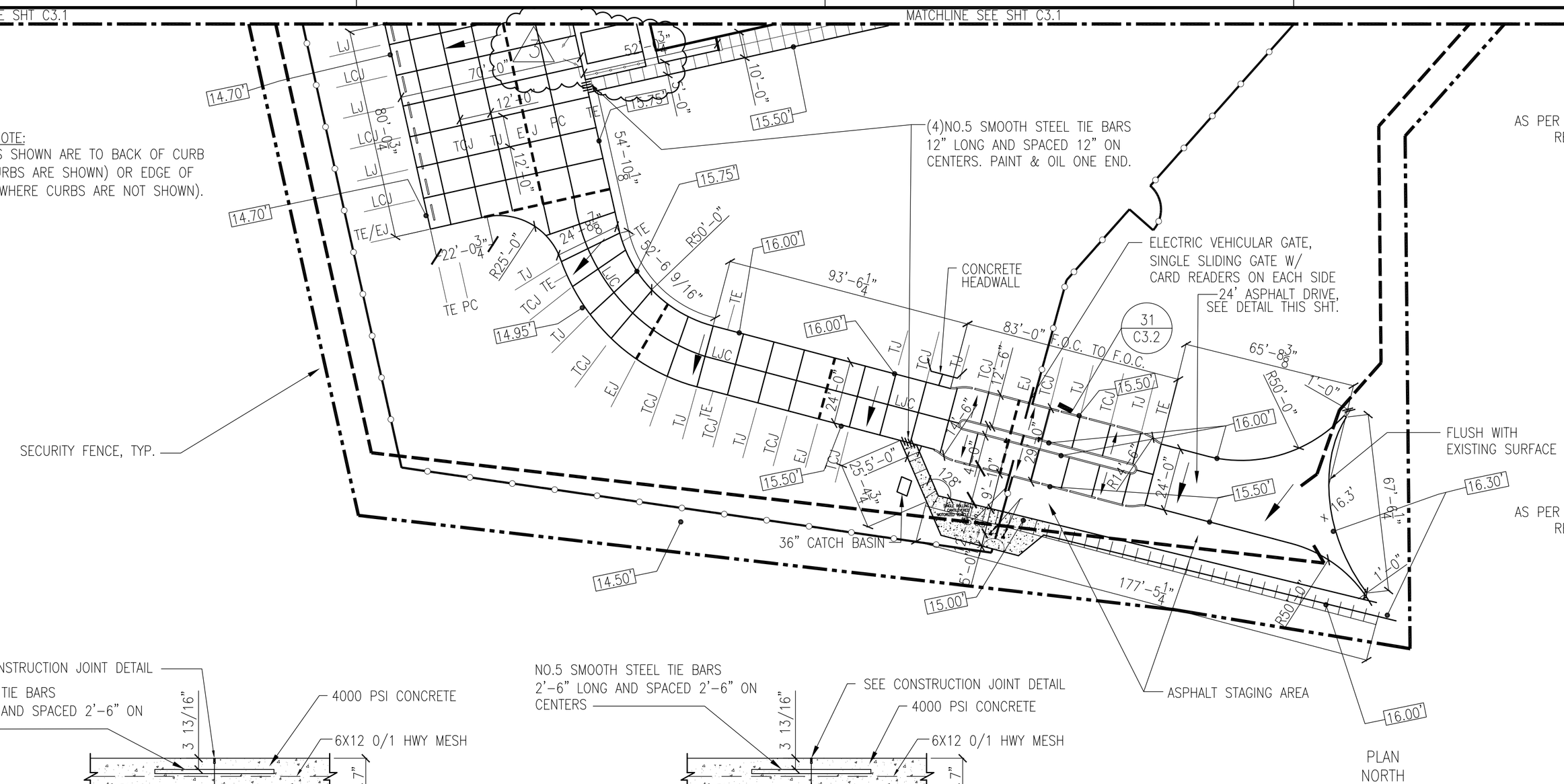

PLAN NORTH

PAVING PLAN PART 2
SCALE: 1"=30'-0"

30' 20' 0 30' 60' 90'

LEGEND
- LONGITUDINAL CONSTRUCTION JOINT (LCJ)
- LONGITUDINAL CONTRACTION JOINT (LJ)
- PERIMETER CONNECTION (PC)
- EXPANSION JOINT (EJ)
- TRANSVERSE CONSTRUCTION JOINT (TCJ)
- TRANSVERSE CONTRACTION JOINT (TJ)
- THICKEND EDGE (TE)
- DRAINAGE PATTERN DIRECTION

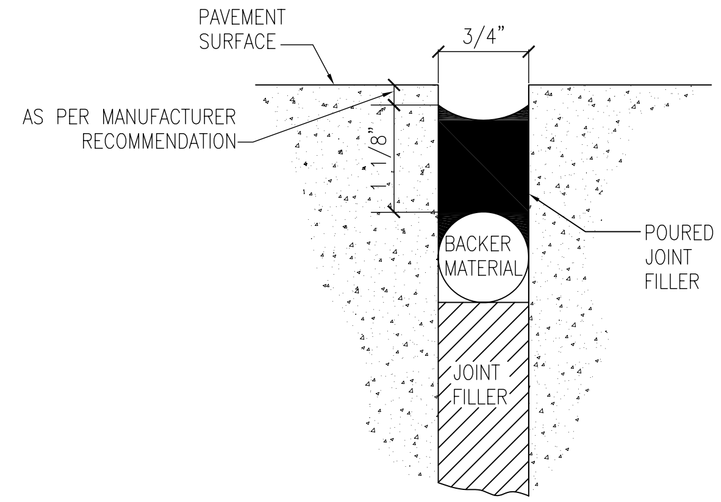

EXPANSION JOINT SEALANT DETAIL (EJ) 28
N.T.S. C3.1 C3.2

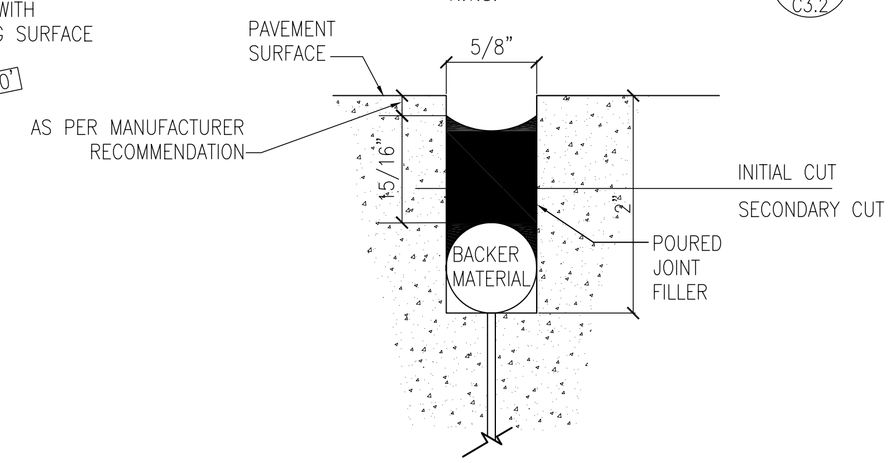

CONSTRUCTION JOINT SEALANT DETAIL 29
N.T.S. C3.1 C3.2

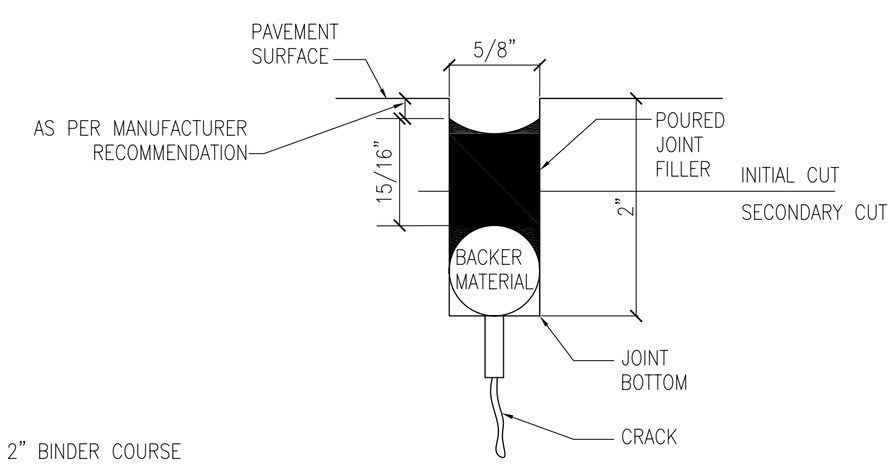

CONTRACTION JOINT SEALANT DETAIL 30
N.T.S. C3.1 C3.2

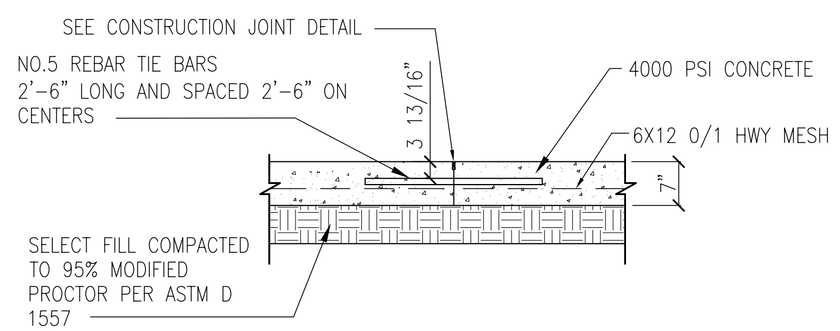

LONGITUDINAL CONSTRUCTION JOINT (LCJ) 20
N.T.S. C3.1 C3.2

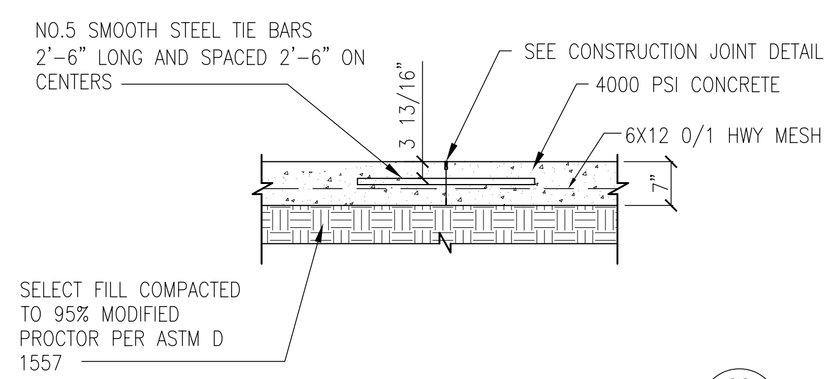

TRANSVERSE CONSTRUCTION JOINT (TCJ) 23
N.T.S. C3.1 C3.2

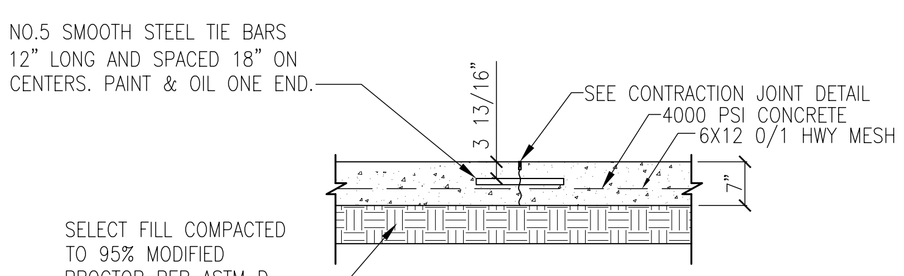

LONGITUDINAL CONTRACTION JOINT (LJ) 21
N.T.S. C3.1 C3.2

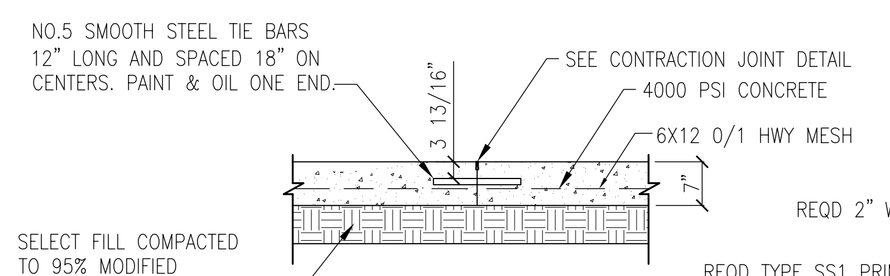

TRANSVERSE CONTRACTION JOINT (TJ) 24
N.T.S. C3.1 C3.2

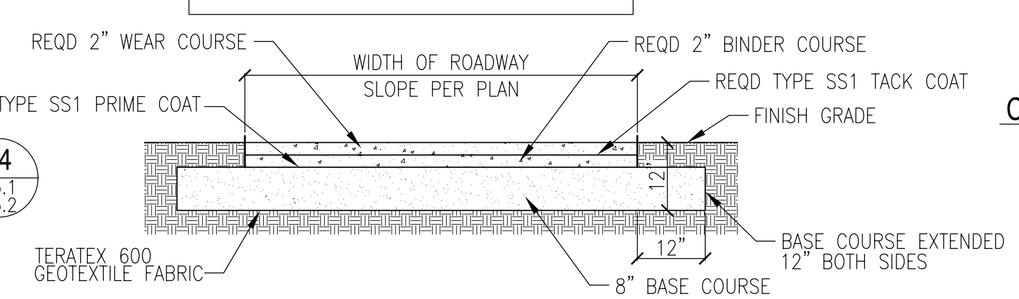

ASPHALT PAVEMENT SECTION 26
N.T.S. C3.1 C3.2

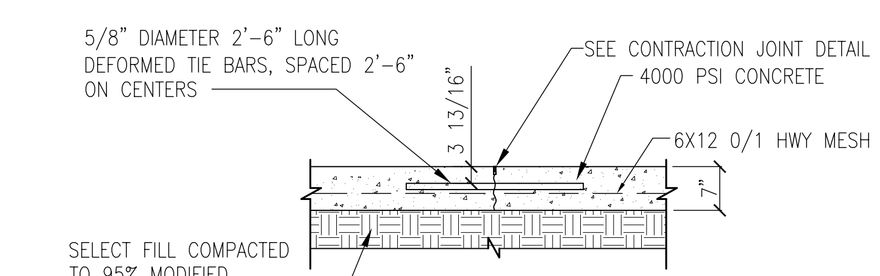

PERIMETER CONNECTION (PC) 22
N.T.S. C3.1 C3.2

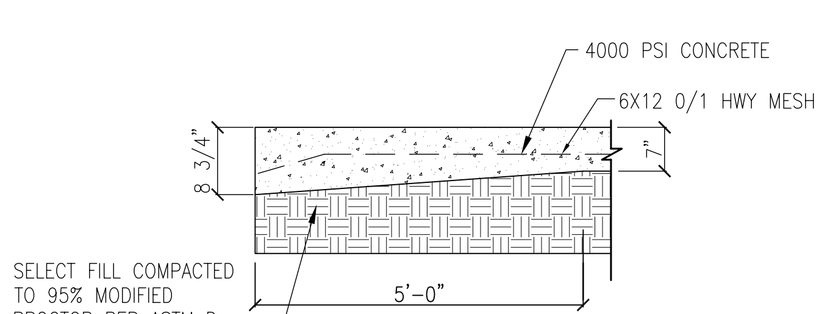

THICKENED EDGE (TE) 25
N.T.S. C3.1 C3.2

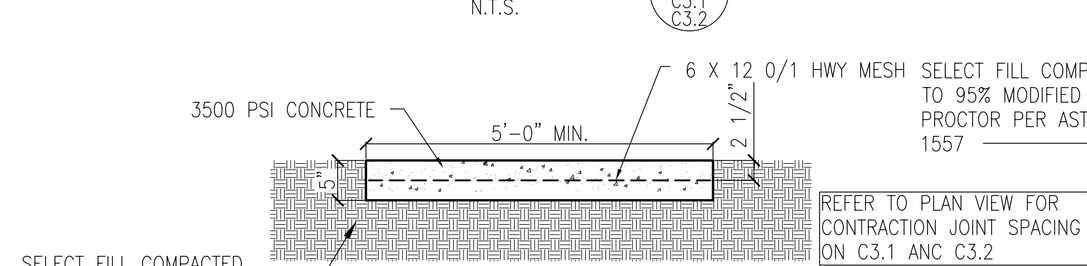

REFER TO PLAN VIEW FOR CONTRACTION JOINT SPACING ON C3.1 ANC C3.2

SIDEWALK SECTION 27
N. T. S. C3.1 C3.2

PROVIDE EXPANSION JOINT 20' O.C. SIMILAR TO DETAIL 28 THIS SHT.

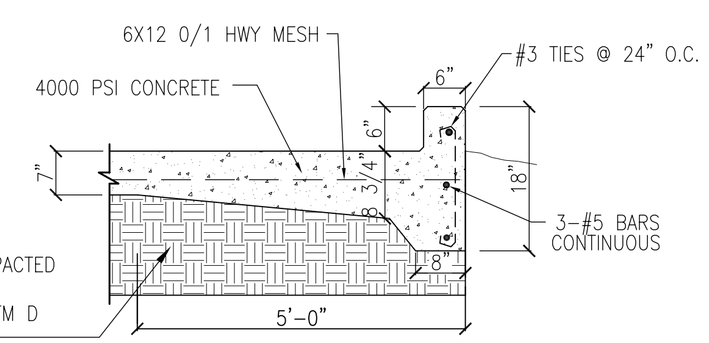

CURB DETAIL 31
C3.1 C3.2

RECORD DRAWING LETTER DATED - 5-27-10

DATE	DESCRIPTION	STM
3-12-10	AS-BUILT CONDITIONS SHOWN	RW
2-1-10	REVISED EXPANSION JOINT LOCATIONS	RW
11-6-09	REVISED AS PER UPS COMMENTS 9 OCTOBER 2009	RW

NAVFAC

DAMMON ENGINEERING, INC.
CHIEF ENGINEER EMMETT L. DAMMON, P.E.
CHIEF ARCHITECT ROBERT WILTSE
1095 FLORIDA AVENUE
SLIDELL, LA 70458
(985) 649-5832
SEPTEMBER 4, 2009

EMMETT G. DAMMON LICENSED PROFESSIONAL ENGINEER 9652 STATE OF MISSISSIPPI

DES: C. DAMMON | DRW: C. DAMMON
REVIEWED BY: R. WILTSE
PM/DM: T. ARTRIP
CHIEF ENG/ARCH. P. DAMMON

DEPARTMENT OF THE NAVY
NAVAL FACILITIES ENGINEERING COMMAND SOUTHEAST
PT. GULF COAST
JOHN C. STENNIS SPACE CENTER

NAVAL FACILITIES ENGINEERING COMMAND
NAVAL AIR STATION JACKSONVILLE
MISSISSIPPI

SOF RIVERINE AND COMBATANT CRAFT OPERATIONS FACILITY - PRE-FINAL

PAVING PLAN PART 2

CODE ID. NO. N4412	SIZE D
SCALE:	AS SHOWN
MAXIMO NO.	######
STA. PROJ. NO.	P-210
WORK ORDER NO.	510247
CONSTR. CONTR. NO.	N62467-05-D-0096
NAVFAC DRAWING NO.	15026665
SHEET 18 OF 132	

C3.2

ROBERT LEE WILTSE REG. NO. 27798 STATE OF LOUISIANA REGISTERED ARCHITECT

DRAWFORM REVISION: 01 JAN 2009

REVDATE: