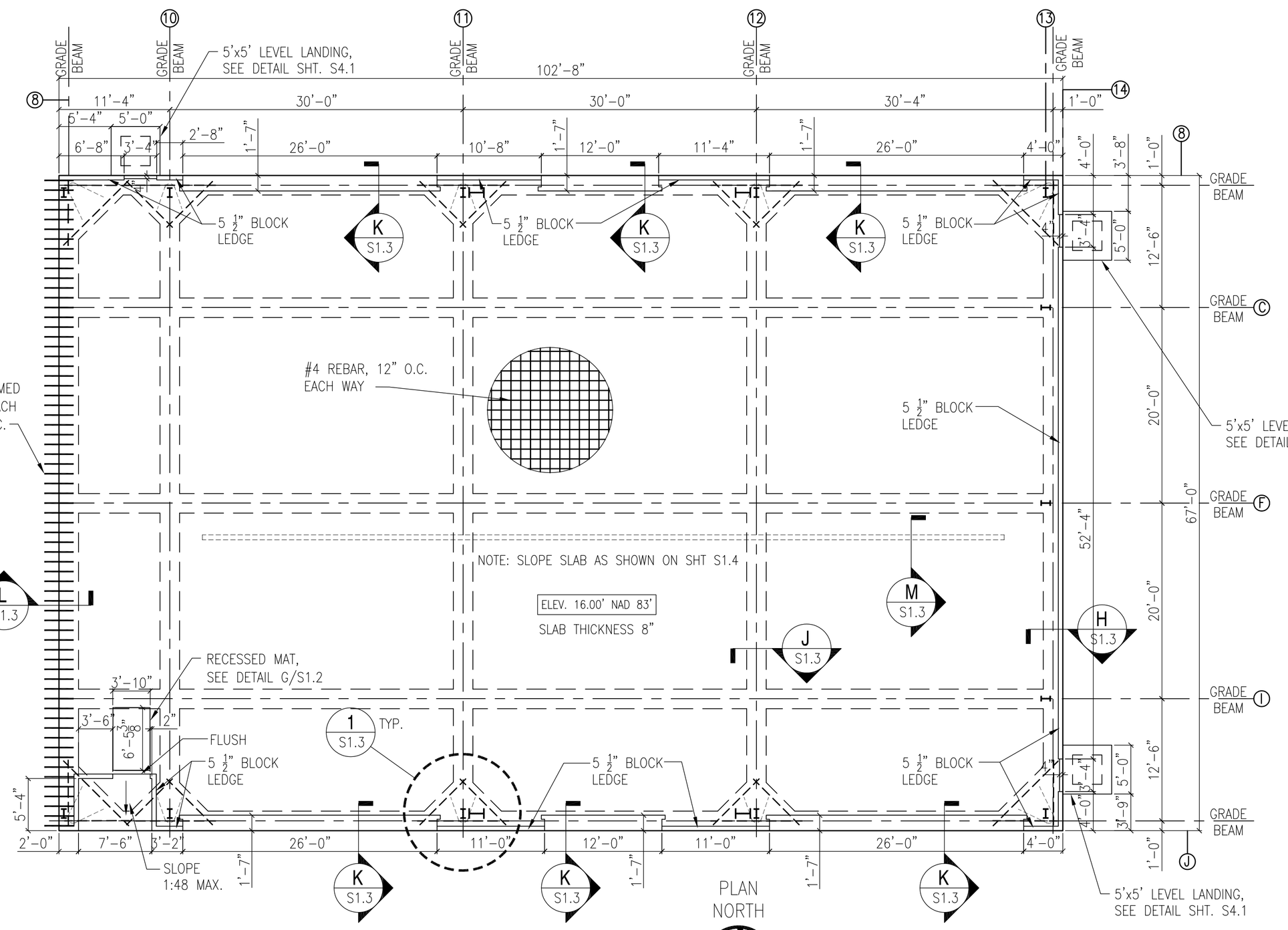

MAINTENANCE BLDG. 2441 FOUNDATION PLAN

SCALE: ⅛"=1'-0"

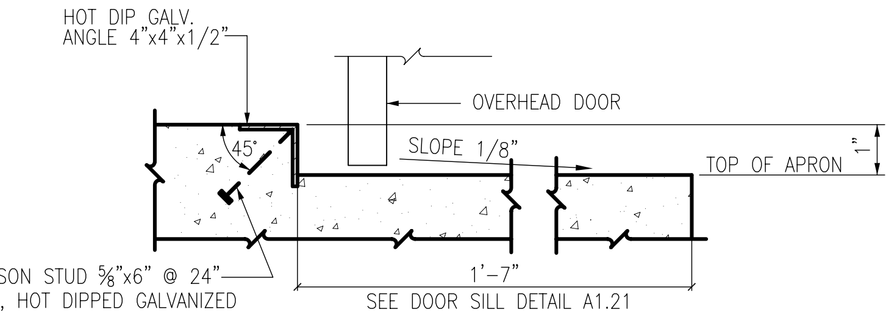

ANGLE EMBEDS SECTION K S1.3

N.T.S.

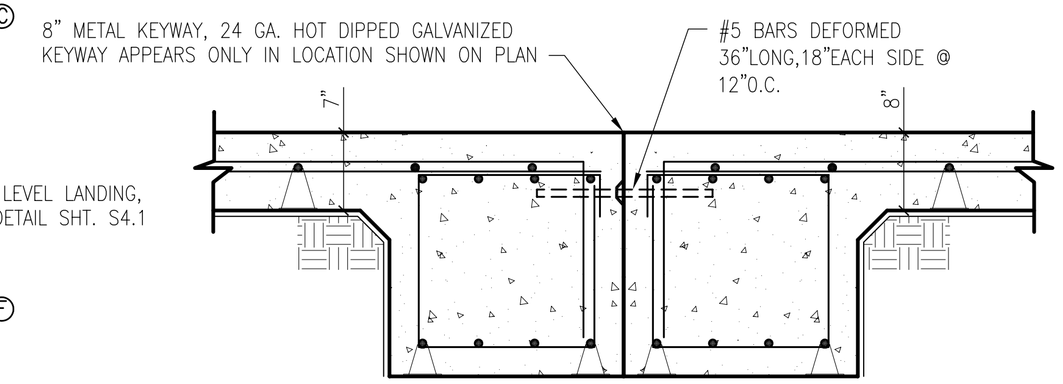

ALL FOUNDATION MATERIALS AND DIMENSIONS FOR EACH GRADE BEAM ARE SIMILAR TO SECTION H

SECTION L S1.3

SCALE: 1"=1'-0"

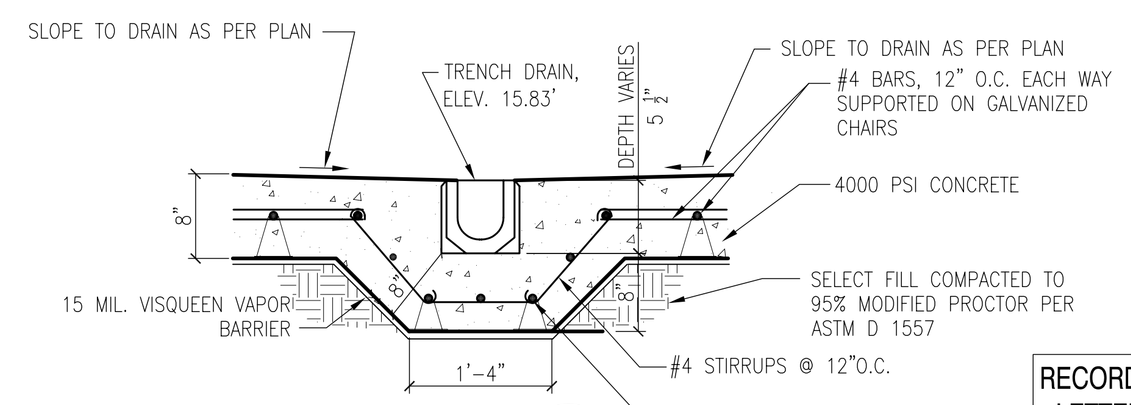

TRENCH SECTION M S1.3

SCALE: 1"=1'-0"

RECORD DRAWING LETTER DATED - 5-27-10

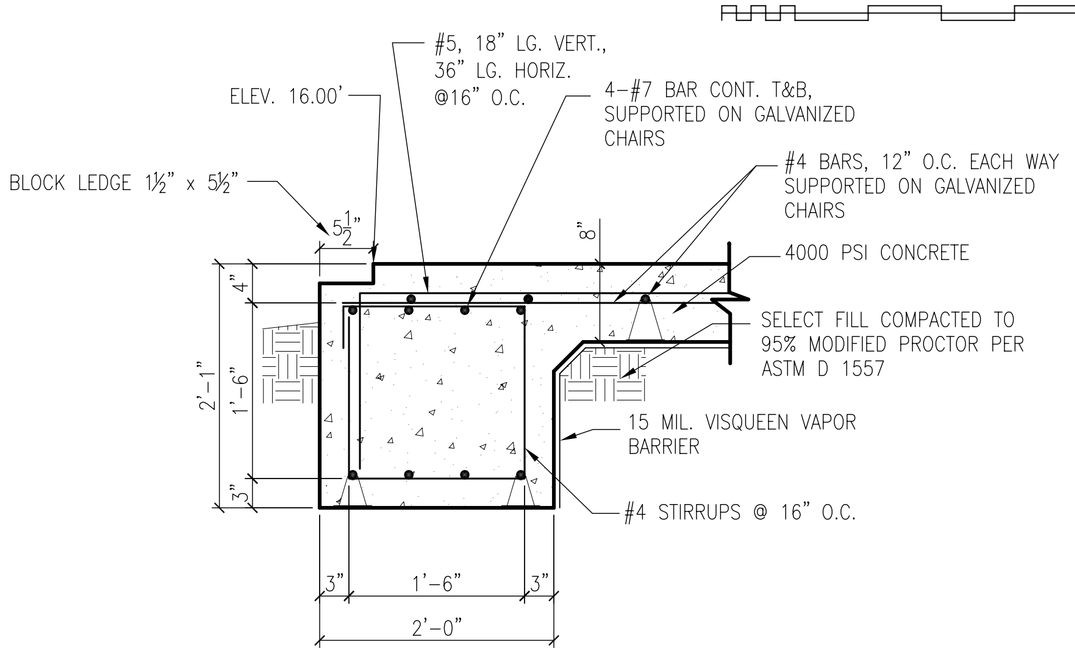

SECTION H S1.3

SCALE: 1"=1'-0"

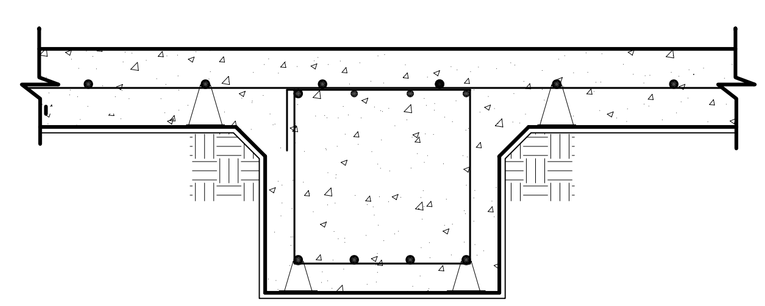

ALL INTERIOR GRADE BEAM MATERIALS AND DIMENSIONS ARE SIMILAR TO SECTION H

SECTION J S1.3

SCALE: 1"=1'-0"

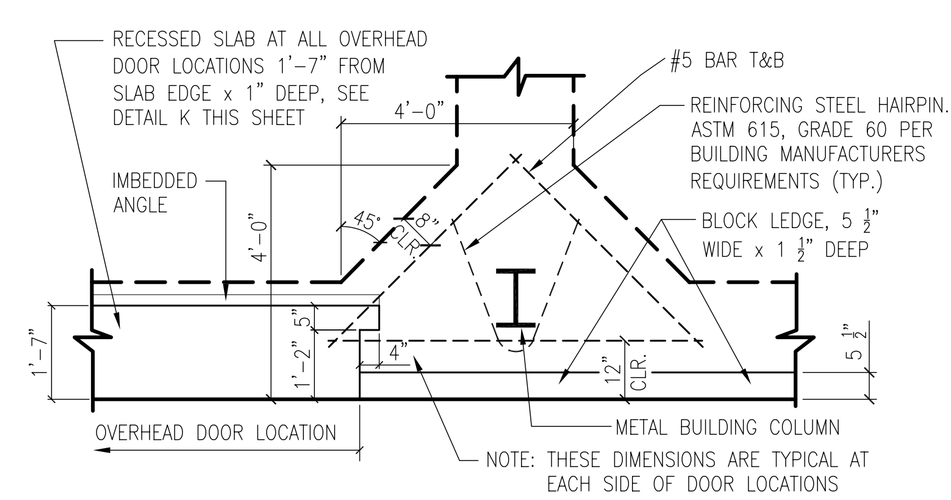

ALL FOUNDATION MATERIALS AND DIMENSIONS ARE SIMILAR TO SECTION H

FOOTING @ COLUMN DETAIL 1 S1.3

SCALE: 1/2"=1'-0"

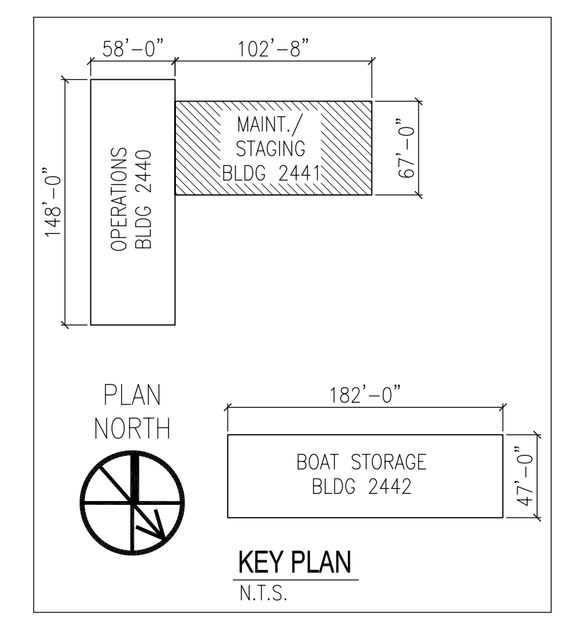

KEY PLAN

N.T.S.

STM	AS-BUILT	4-27-10	RW

NAVFAC

DAMMON ENGINEERING, INC.
CHIEF ENGINEER EMMETT DAMMON, P.E. — CHIEF ARCHITECT ROBERT WILTSE
1095 FLORIDA AVENUE SLIDELL, LA 70458 (985) 649-5832
SEPTEMBER 4, 2009

EMMETT G. DAMMON LICENSED PROFESSIONAL ENGINEER 9652 STATE OF MISSISSIPPI

ROBERT LEE WILTSE REG. NO. 27341 STATE OF LOUISIANA REGISTERED ARCHITECT

DES: C. DAMMON | DRW: C. DAMMON
REVIEWED BY: R. WILTSE
PM/DM: T. ARTRIP
CHIEF ENG/ARCH. P. DAMMON

DEPARTMENT OF THE NAVY
NAVAL FACILITIES ENGINEERING COMMAND SOUTHEAST
JOHN C. STENNIS SPACE CENTER
PT GULF COAST
NAVAL FACILITIES ENGINEERING COMMAND
NAVAL AIR STATION JACKSONVILLE
MISSISSIPPI

SOF RIVERINE AND COMBATANT CRAFT OPERATIONS FACILITY - PRE-FINAL

MAINTAINENCE BLDG. 2441 FOUNDATION PLAN

CODE ID. NO. N4412	SIZE D
SCALE:	AS SHOWN
MAXIMO NO.	######
STA. PROJ. NO.	P-210
WORK ORDER NO.	510247
CONSTR. CONTR. NO.	N62467-05-D-0096
NAVFAC DRAWING NO.	15026720
SHEET	73 OF 132

S1.3

DRAWIFORM REVISION: 01 JAN 2009

REVDATE: