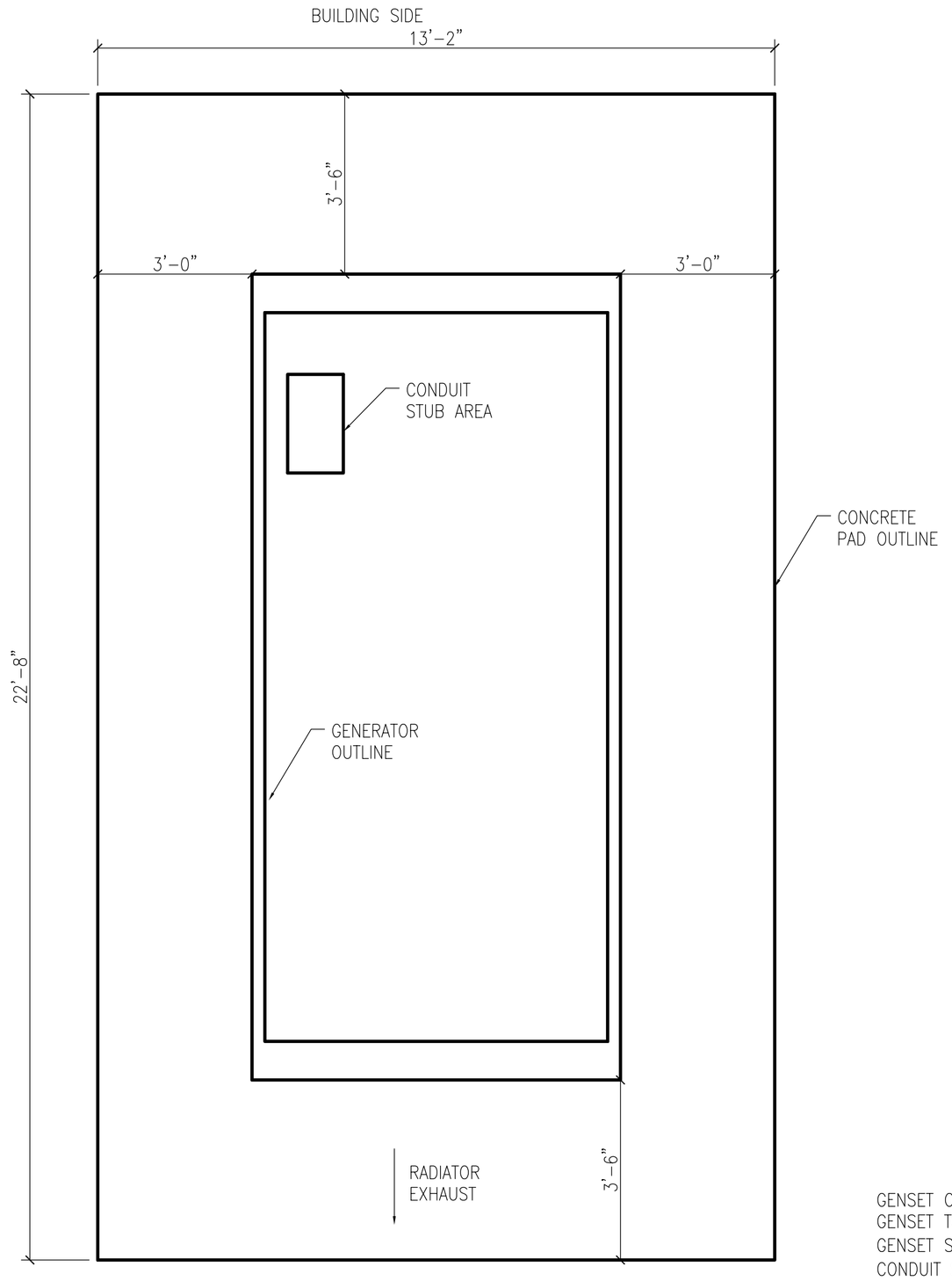

GENERATOR PAD LAYOUT (14 / C1.1)
SCALE: 1/2" = 1'-0"

GENSET OVERALL SIZE: 86"WX188"LX106"H
GENSET TOTAL WEIGHT: 13800 LBS
GENSET SKID FOOTPRINT: 80"WX170"L
CONDUIT STUB AREA: 13"X23"
NO WINDOW, CONDUIT INSTALLED BEFORE POUR.

GENERATOR DIMENSIONS (HH / S4.3)
SCALE: 1/2" = 1'-0"

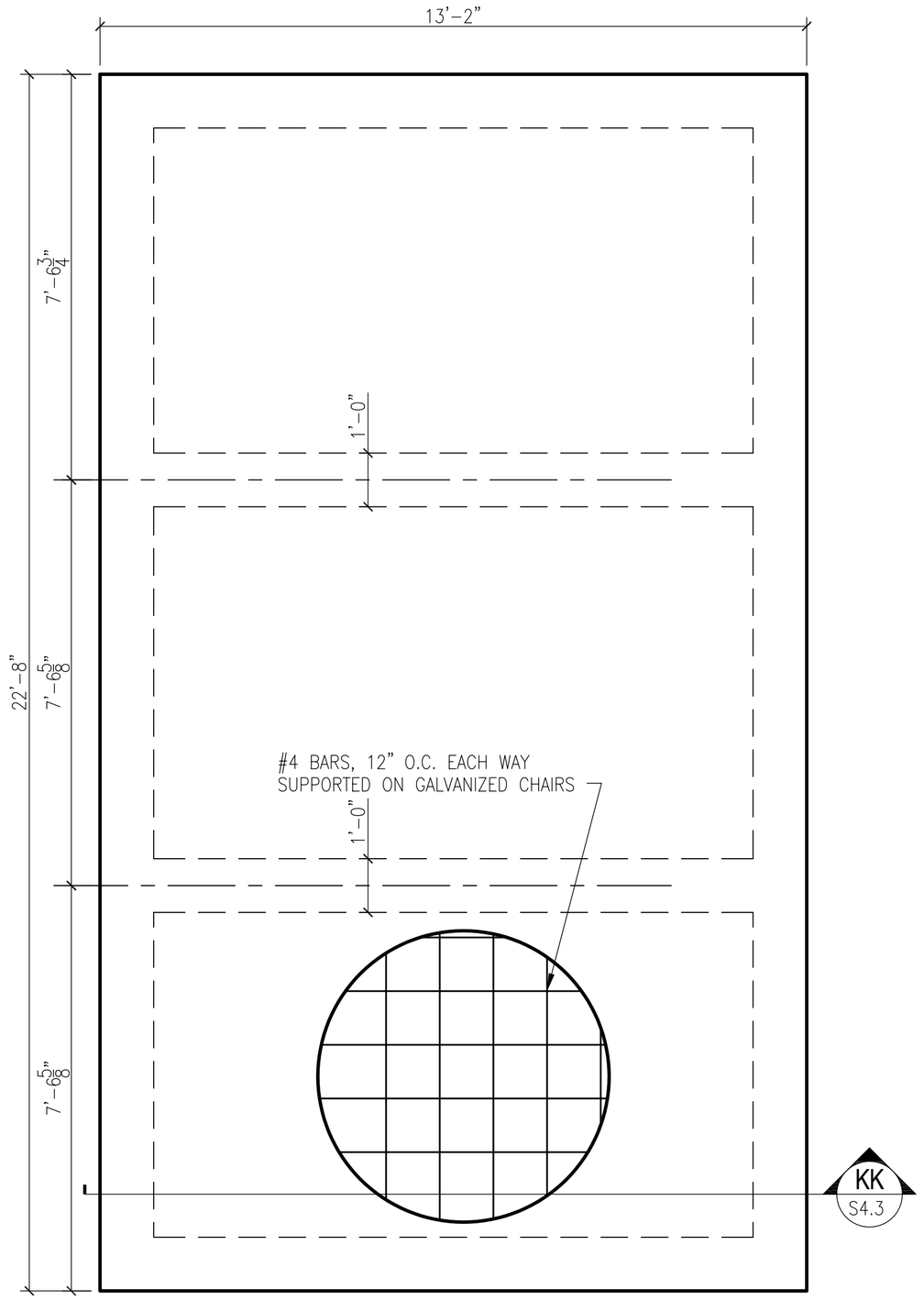

GENERATOR PAD FOUNDATION (16 / C1.1)
SCALE: 1/2" = 1'-0"

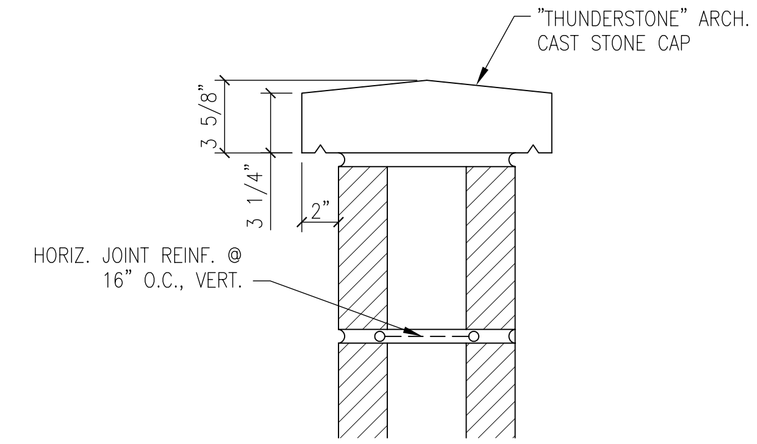

CAST STONE CAP DETAIL FOR DUMPSTER (17 / S4.2)
N.T.S.

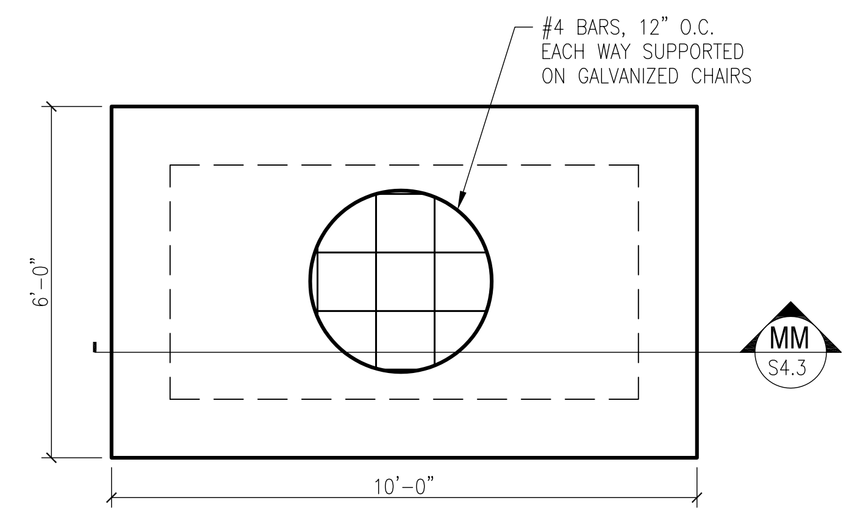

HAZARDOUS MATERIAL FOUNDATION (18 / C1.1)
SCALE: 1/2" = 1'-0"

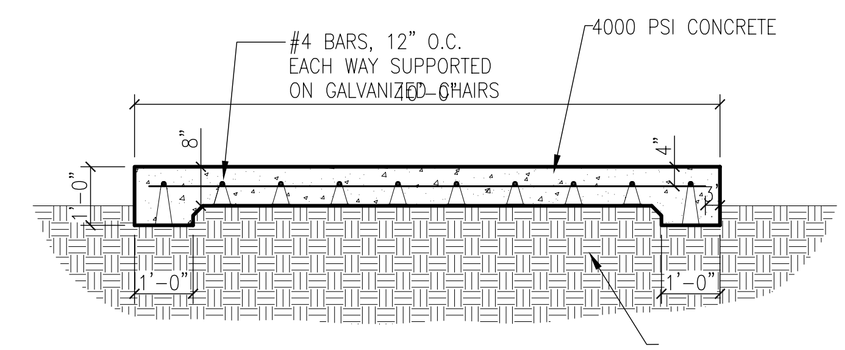

HAZARDOUS MATERIAL SECTION (MM / S4.3)
SCALE: 1/2" = 1'-0"

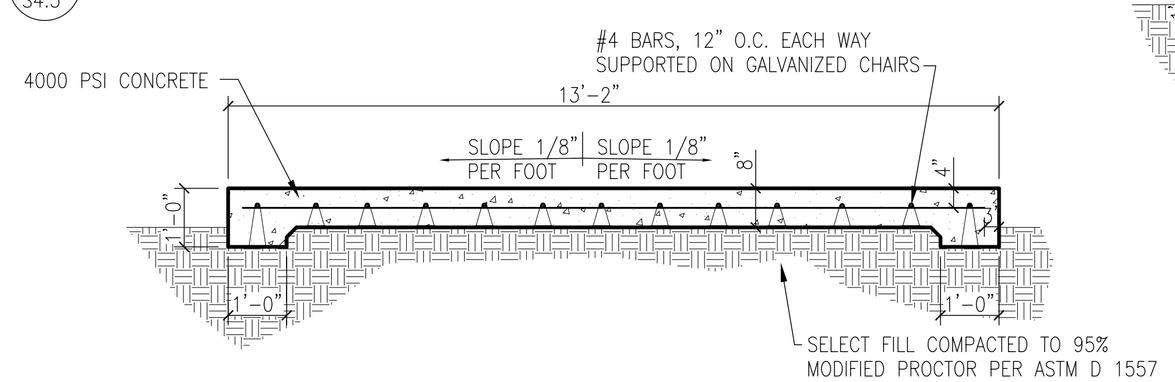

GENERATOR PAD SECTION (KK / S4.3)
SCALE: 1/2" = 1'-0"

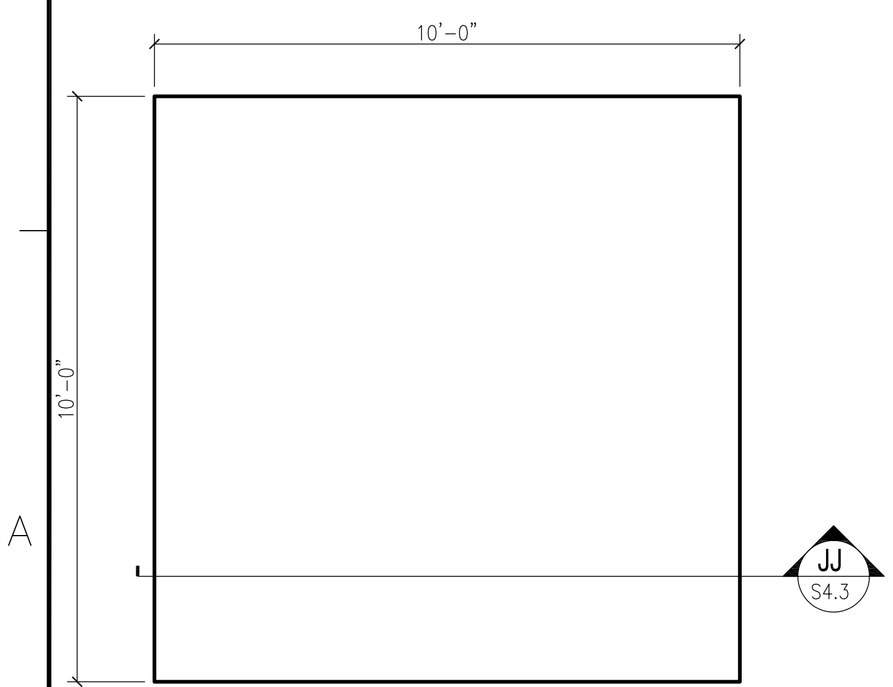

BICYCLE PAD FOUNDATION (15 / C1.1)
SCALE: 1/2" = 1'-0"

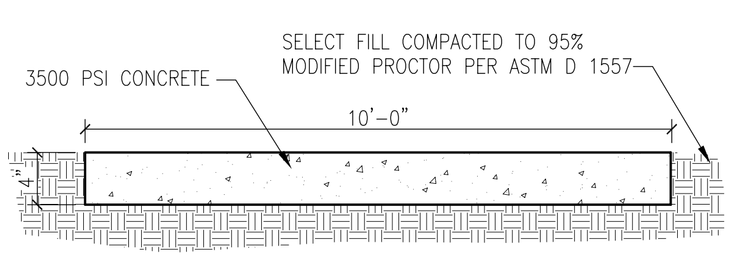

BICYCLE PAD SECTION (JJ / S4.3)
SCALE: 1/2" = 1'-0"

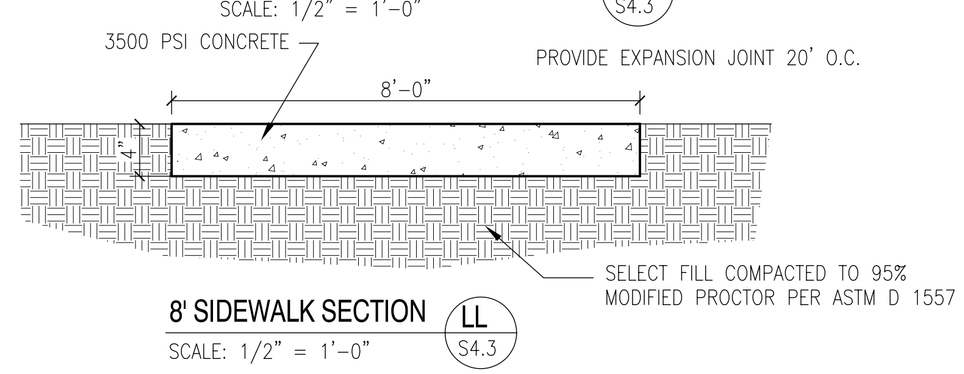

8' SIDEWALK SECTION (LL / S4.3)
SCALE: 1/2" = 1'-0"

RECORD DRAWING LETTER DATED - 5-27-10

1' 0 1' 2' 3' 4' 5' 6' 7' 8'

STM	AS-BUILT	4-27-10	RW
	DESCRIPTION	DATE	APPR

NAVFAC

DAMMON ENGINEERING, INC.
CHIEF ENGINEER EMMETT G. DAMMON, P.E.
CHIEF ARCHITECT ROBERT WILTSE
1095 FLORIDA AVENUE
SLIDELL, LA 70458
(985) 649-5832
SEPTEMBER 4, 2009

EMMETT G. DAMMON LICENSED PROFESSIONAL ENGINEER 9652 STATE OF MISSISSIPPI

DES: C. DAMMON | DRW: C. DAMMON
REVIEWED BY: R. WILTSE
PM/DM: T. ARTRIP
CHIEF ENG/ARCH: P. DAMMON

DEPARTMENT OF THE NAVY
NAVAL FACILITIES ENGINEERING COMMAND SOUTHEAST
(PT GULF COAST)
NAVAL FACILITIES ENGINEERING COMMAND
NAVAL AIR STATION JACKSONVILLE
JOHN C. STENNIS SPACE CENTER MISSISSIPPI

SOF RIVERINE AND COMBATANT CRAFT OPERATIONS FACILITY - PRE-FINAL

STRUCTURAL DETAILS

ROBERT LEE WILTSE REG. NO. 27736 STATE OF LOUISIANA REGISTERED ARCHITECT

CODE ID. NO. N4412	SIZE D
SCALE:	AS SHOWN
MAXIMO NO.	######
STA. PROJ. NO.	P-210
WORK ORDER NO.	510247
CONSTR. CONTR. NO.	N62467-05-D-0096
NAVFAC DRAWING NO.	15026730
SHEET	83 OF 132

S4.3

DRAWFORM REVISION: 01 JAN 2009

REVDATE: