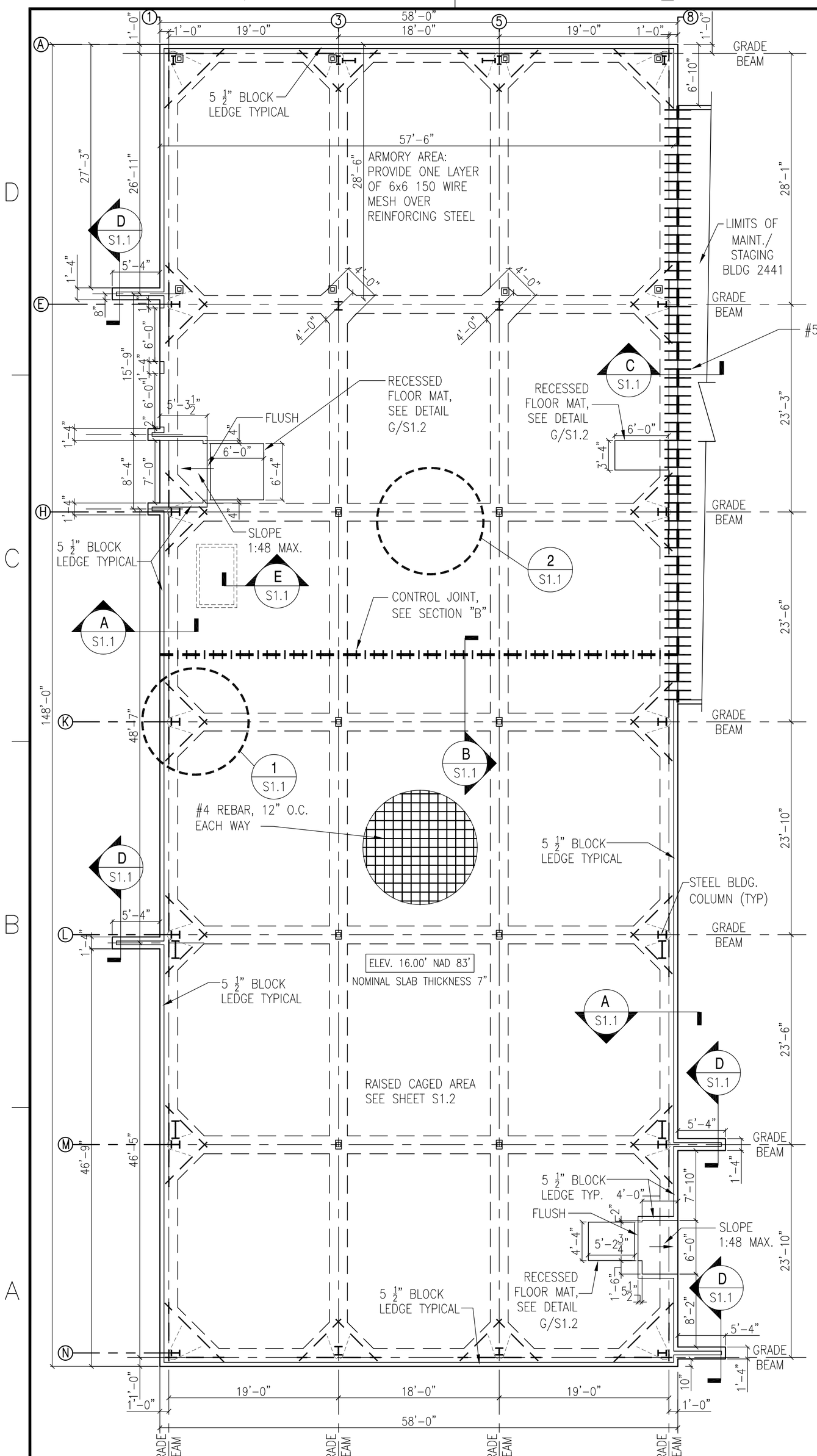

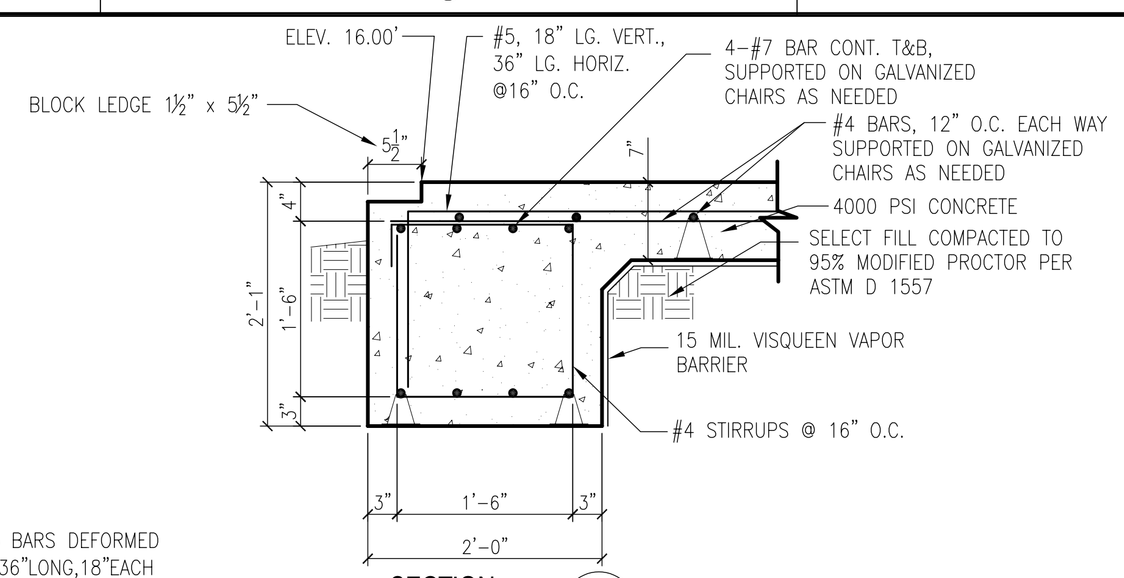

SECTION A
SCALE: 1"=1'-0" S1.1

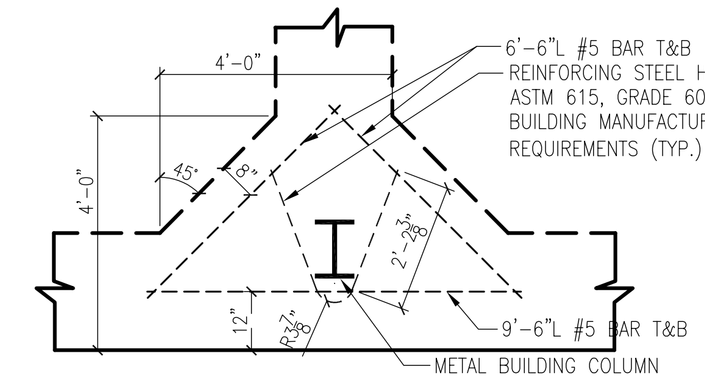

ALL FOUNDATION MATERIALS AND DIMENSIONS ARE SIMILAR TO SECTION A

FOOTING @ COLUMN DETAIL 1 S1.1
SCALE: 1/2"=1'-0"

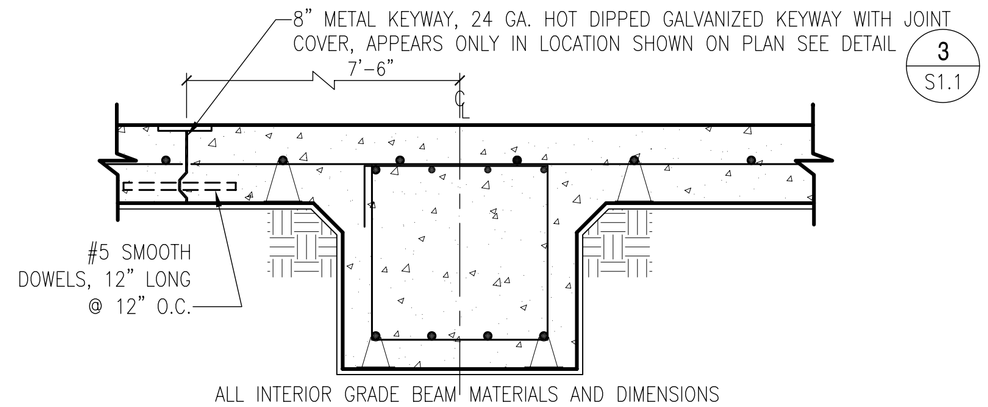

ALL INTERIOR GRADE BEAM MATERIALS AND DIMENSIONS ARE SIMILAR TO SECTION A

CONTROL JOINT SECTION B S1.1
SCALE: 1"=1'-0"

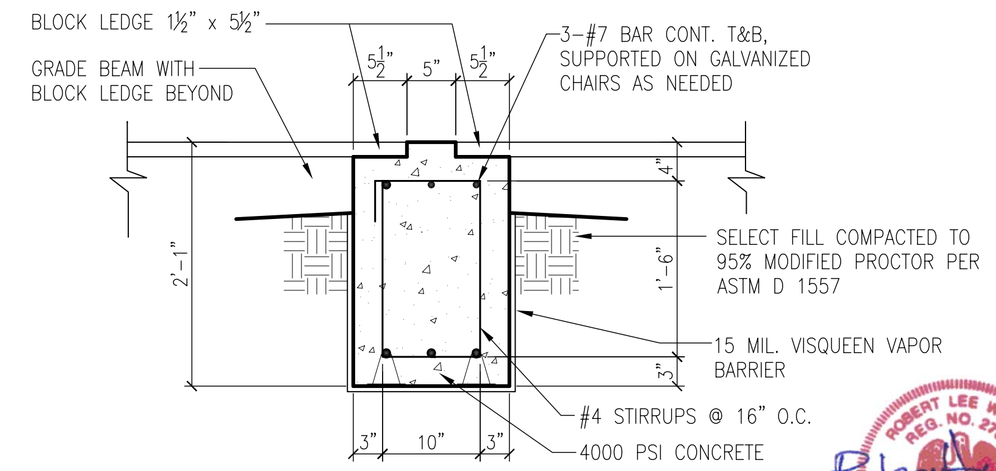

SECTION D
SCALE: 1"=1'-0" S1.1

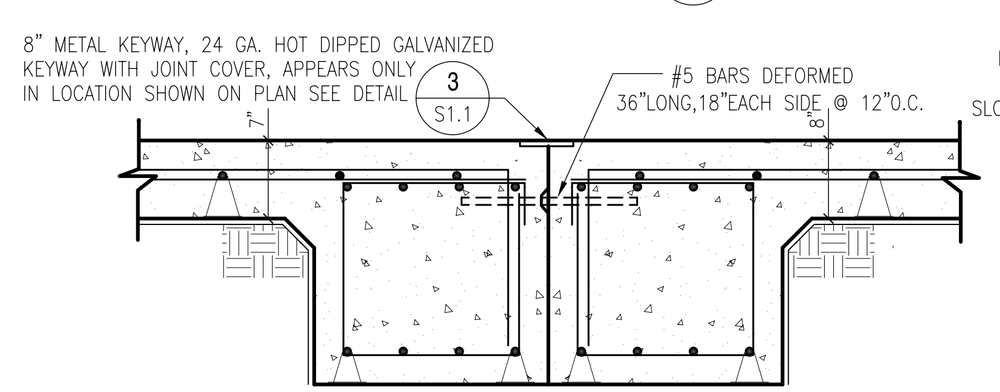

ALL FOUNDATION MATERIALS AND DIMENSIONS FOR EACH GRADE BEAM ARE SIMILAR TO SECTION A

SECTION C
SCALE: 1"=1'-0" S1.1

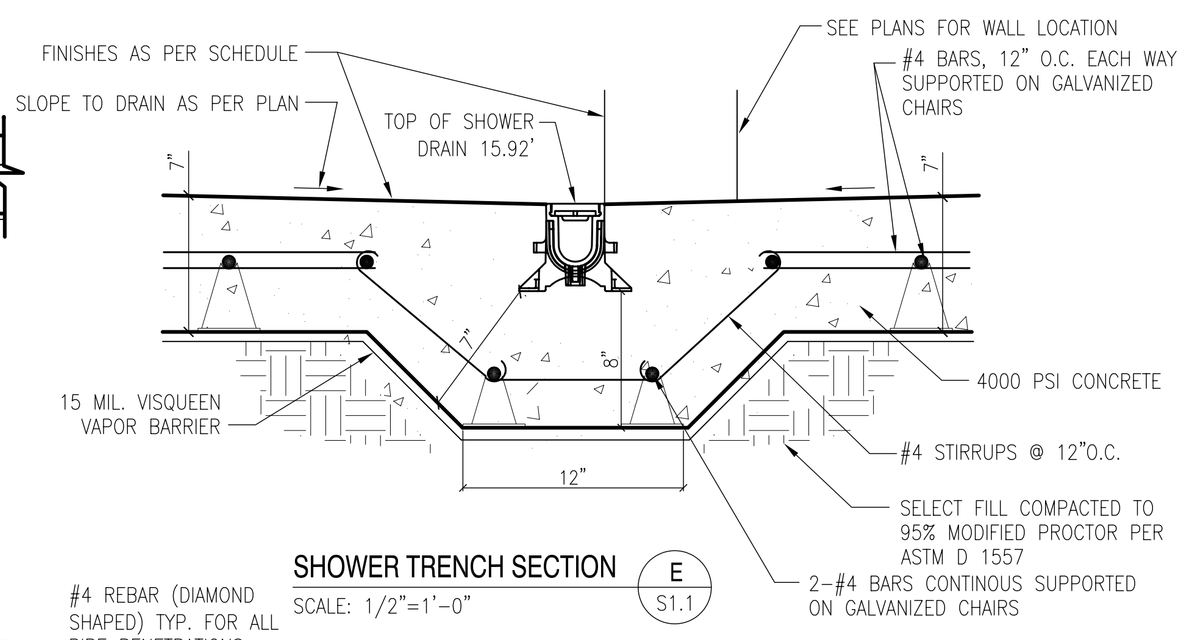

SHOWER TRENCH SECTION E S1.1
SCALE: 1/2"=1'-0"

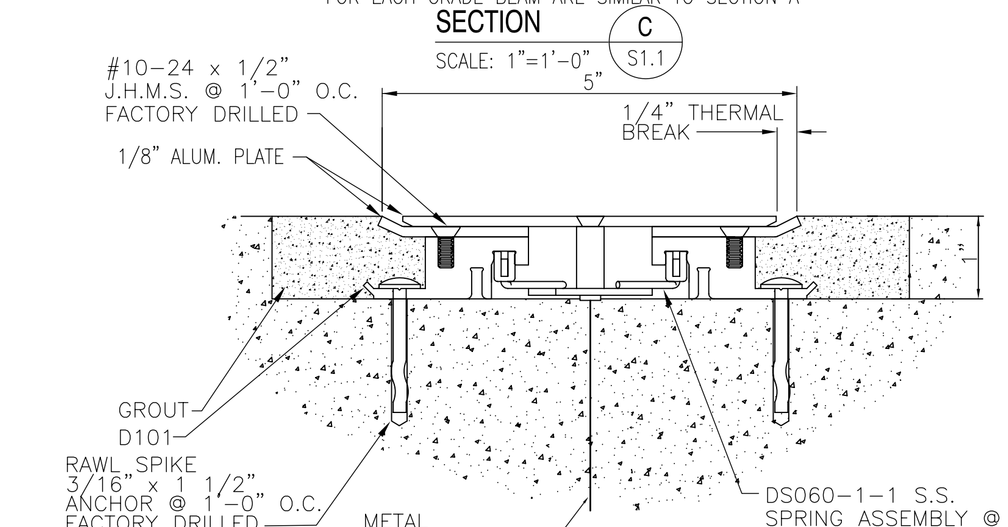

JOINT COVER 3 S1.1
SCALE: 1"=1'-0"

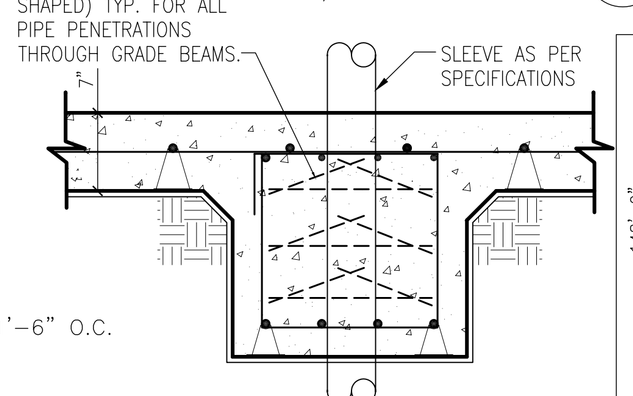

FOR HORZ. PENETRATIONS 12" OR GREATER IN DIAMETER, ADD FOOTING DEPTH EQUAL TO PIPE SIZE

ALL INTERIOR GRADE BEAM MATERIALS AND DIMENSIONS ARE SIMILAR TO SECTION A

PIPE PENETRATION AT GRADE BEAM DETAIL 2 S1.1
SCALE: 1"=1'-0"

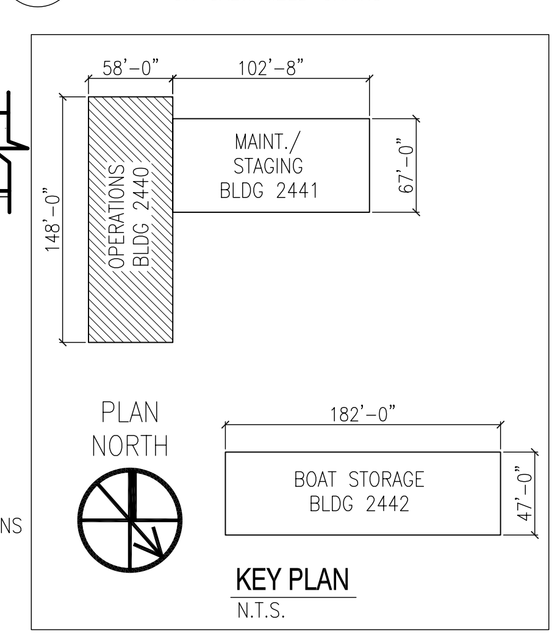

KEY PLAN
N.T.S.

BLDG. 2440 FOUNDATION PLAN
SCALE: 1/8" = 1'-0"

5' 0 5' 10' 15' 20' 25'

REVDATE:

APPR	DATE	DESCRIPTION	STM

NAVFAC

DAMMON ENGINEERING, INC.
CHIEF ENGINEER EMMETT G. DAMMON, P.E. | CHIEF ARCHITECT ROBERT WILTSE
1095 FLORIDA AVENUE
SLIDELL, LA 70458
(985) 649-5832
SEPTEMBER 4, 2009

DES: C. DAMMON | DRW: C. DAMMON
REVIEWED BY: R. WILTSE
PM/DM: T. ARTRIP
CHIEF ENG/ARCH. P. DAMMON

DEPARTMENT OF THE NAVY
NAVAL FACILITIES ENGINEERING COMMAND
IPT GULF COAST
JOHN C. STENNIS SPACE CENTER
NAVAL FACILITIES ENGINEERING COMMAND SOUTHEAST
NAVAL AIR STATION JACKSONVILLE
MISSISSIPPI

SOF RIVERINE AND COMBATANT CRAFT OPERATIONS FACILITY - PRE-FINAL

OPERATIONS BLDG. 2440 FOUNDATION PLAN

CODE ID. NO. N4412	SIZE D
SCALE:	AS SHOWN
MAXIMO NO.	######
STA. PROJ. NO.	P-210
WORK ORDER NO.	510247
CONSTR. CONTR. NO.	N62467-05-D-0096
NAVFAC DRAWING NO.	15026718
SHEET	71 OF 132

S1.1

DRAWFORM REVISION: 01 JAN 2009