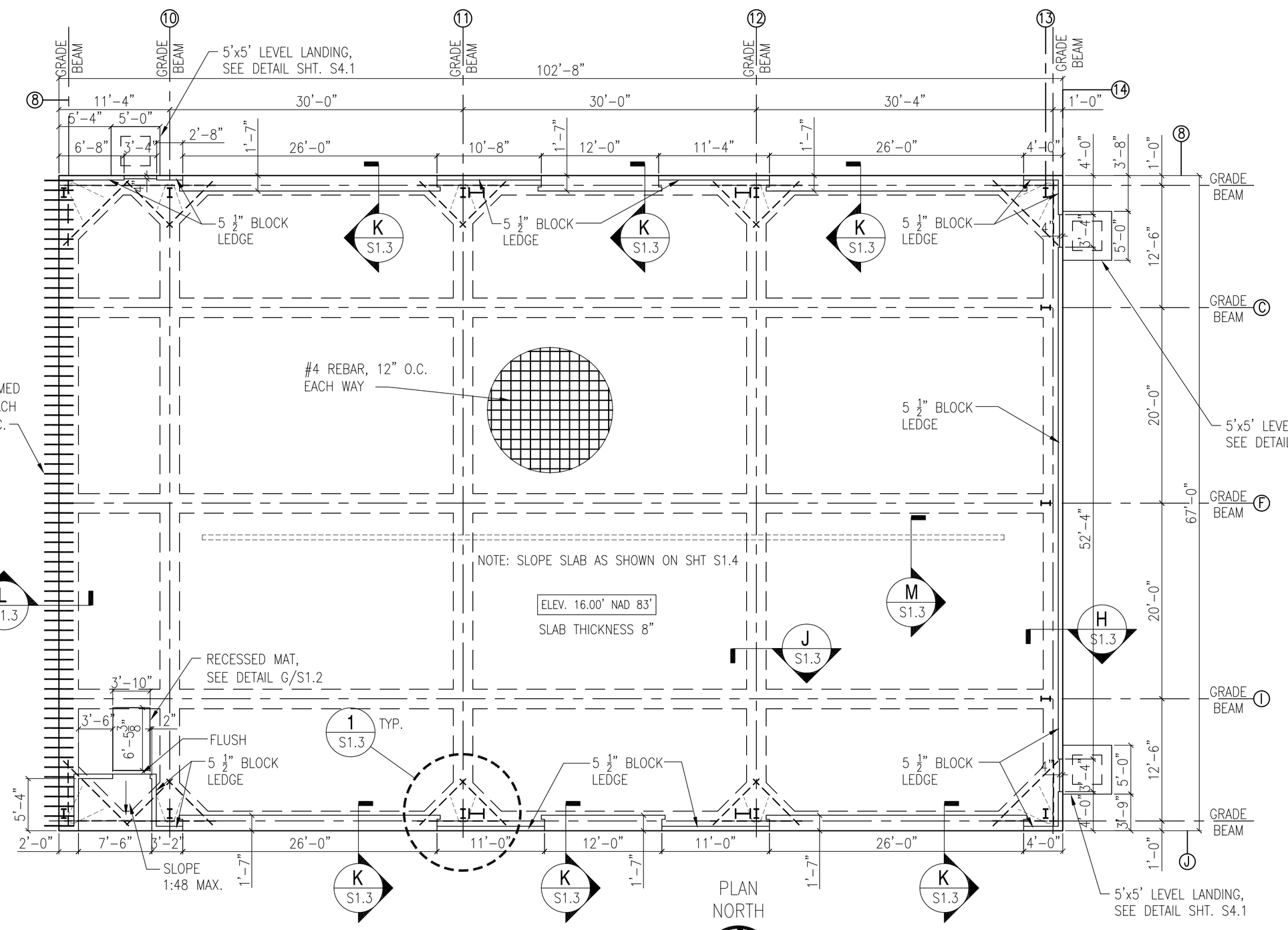

MAINTENANCE BLDG. 2441 FOUNDATION PLAN

SCALE: ⅛"=1'-0"

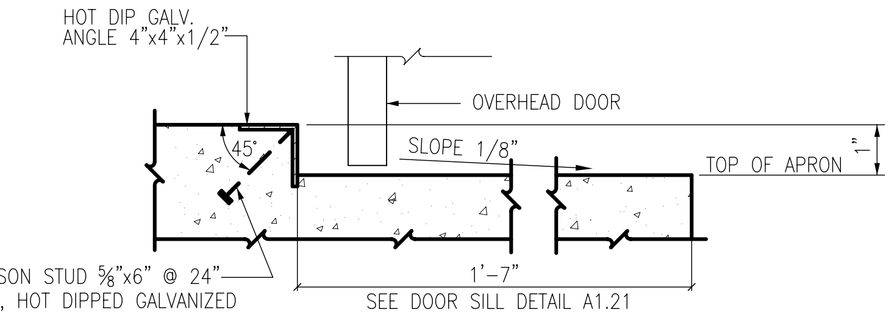

ANGLE EMBEDS SECTION K S1.3

N.T.S.

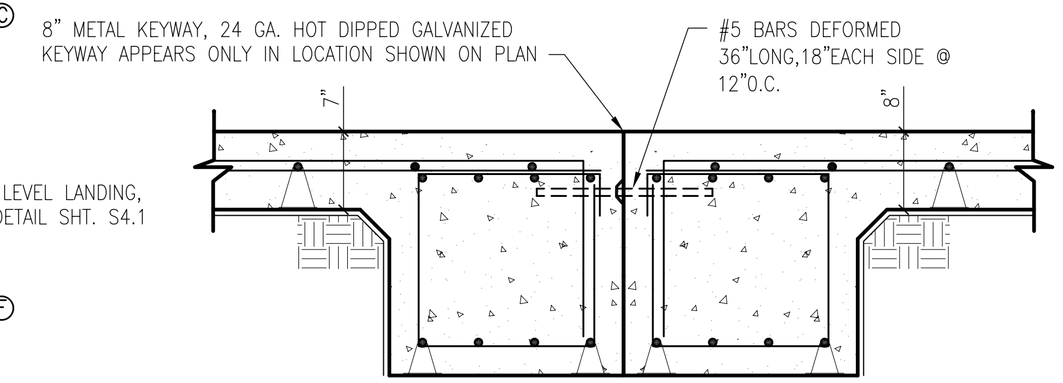

ALL FOUNDATION MATERIALS AND DIMENSIONS FOR EACH GRADE BEAM ARE SIMILAR TO SECTION H

SECTION L S1.3

SCALE: 1"=1'-0"

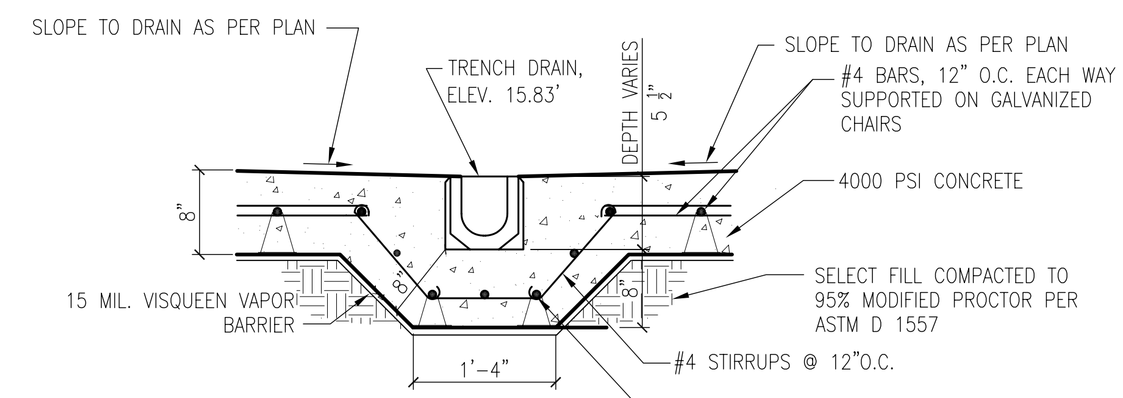

TRENCH SECTION M S1.3

SCALE: 1"=1'-0"

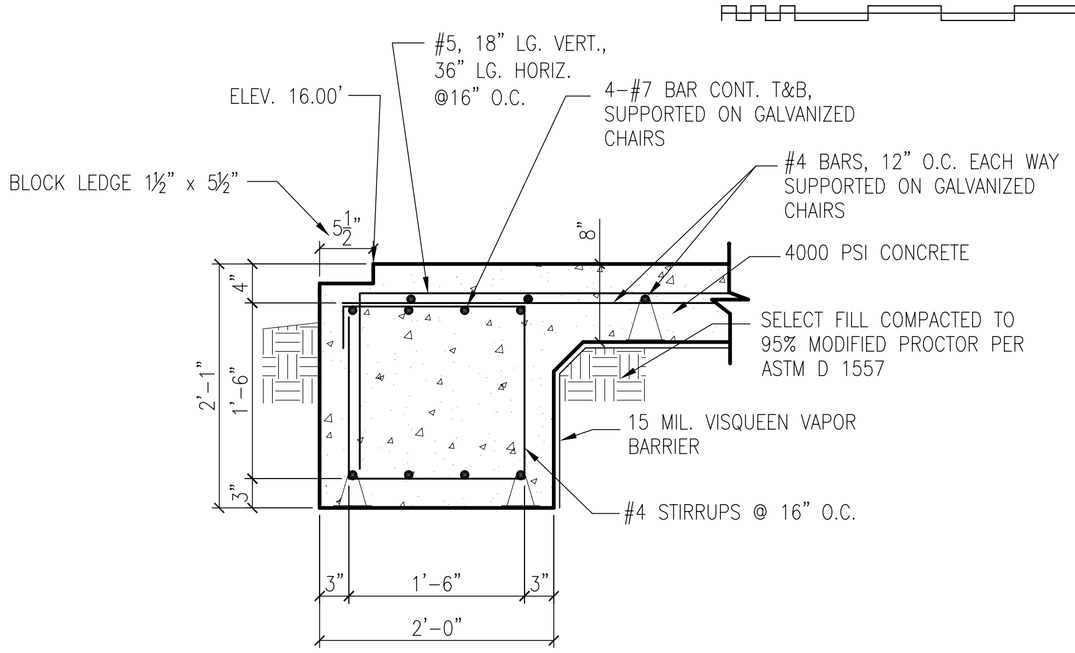

SECTION H S1.3

SCALE: 1"=1'-0"

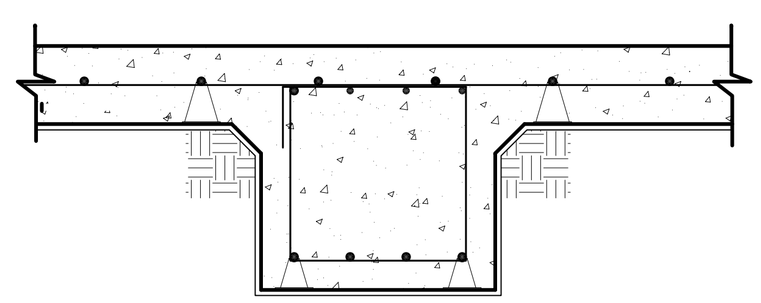

ALL INTERIOR GRADE BEAM MATERIALS AND DIMENSIONS ARE SIMILAR TO SECTION H

SECTION J S1.3

SCALE: 1"=1'-0"

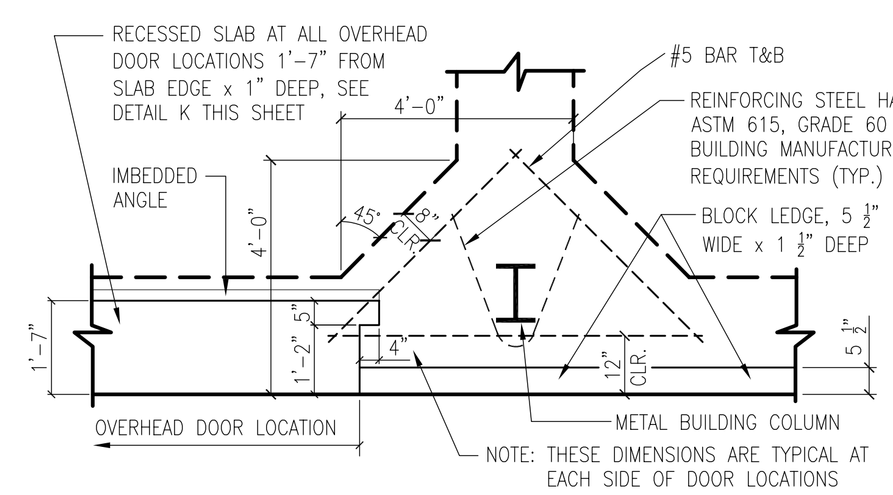

ALL FOUNDATION MATERIALS AND DIMENSIONS ARE SIMILAR TO SECTION H

FOOTING @ COLUMN DETAIL 1 S1.3

SCALE: 1/2"=1'-0"

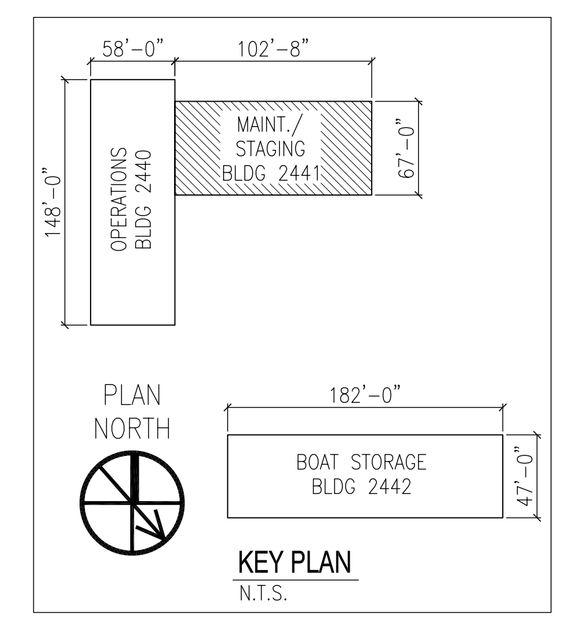

KEY PLAN

N.T.S.

		APPR
		DATE
		DESCRIPTION
		SYM

NAVFAC

DAMMON ENGINEERING, INC.
CHIEF ENGINEER EMMETT DAMMON, P.E. — CHIEF ARCHITECT ROBERT WILTSE
1095 FLORIDA AVENUE
SLIDELL, LA 70458
(985) 649-5832
SEPTEMBER 4, 2009

EMMETT G. DAMMON LICENSED PROFESSIONAL ENGINEER 9652 STATE OF MISSISSIPPI

ROBERT LEE WILTSE REG. NO. 27294 STATE OF LOUISIANA REGISTERED ARCHITECT

DES: C. DAMMON | DRW: C. DAMMON
REVIEWED BY: R. WILTSE
PM/DM: T. ARTRIP
CHIEF ENG/ARCH. P. DAMMON

DEPARTMENT OF THE NAVY
NAVAL FACILITIES ENGINEERING COMMAND SOUTHEAST
NPT GULF COAST — JOHN C. STENNIS SPACE CENTER
NAVAL FACILITIES ENGINEERING COMMAND
NAVAL AIR STATION JACKSONVILLE — MISSISSIPPI

SOF RIVERINE AND COMBATANT CRAFT OPERATIONS FACILITY - PRE-FINAL

MAINTAINENCE BLDG. 2441 FOUNDATION PLAN

CODE ID. NO. N4412	SIZE D
SCALE:	AS SHOWN
MAXIMO NO.	######
STA. PROJ. NO.	P-210
WORK ORDER NO.	510247
CONSTR. CONTR. NO.	N62467-05-D-0096
NAVFAC DRAWING NO.	15026720
SHEET	73 OF 132

S1.3

DRAWIFORM REVISION: 01 JAN 2009

REVDATE: