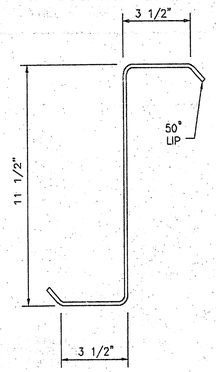

11 1/2 PURLIN — EN53C1

EN53C1V1 09/01/2001

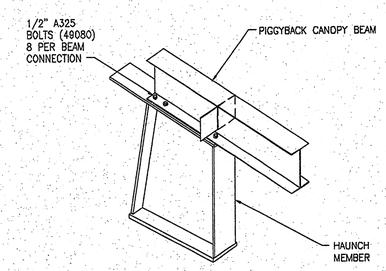

NOTE: WHEN INSTALLING ROOF PANEL STRUCTURAL FASTENERS, AVOID FASTENING THRU PIGGYBACK CANOPY BEAMS.

PIGGYBACK CANOPY BEAM — PF20C1

ATTACHMENT TO INTERIOR FRAME

PF20C1V5 R 02/09/2006

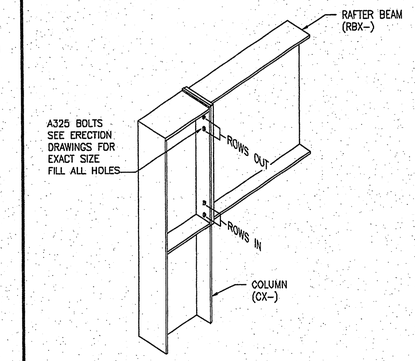

HAUNCH TO COLUMN CONNECTION — PF01A2

FACE/VERTICAL BOLTED COLUMN

PF01A2V1 05/25/2005

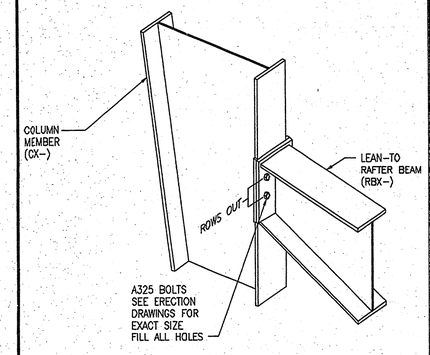

LEAN-TO BEAM ATTACHMENT — PF02G2

BELOW EAVE LEAN-TO

PF02G2V5 R 08/08/2006

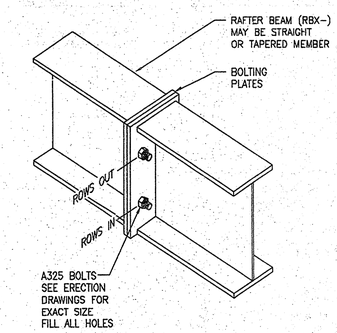

RAFTER BEAM CONNECTION — PF03A1

RAKE BEAM OR FULL FRAME

PF03A1V3 01/20/2004

NOTES — RC00A1

1. STANDARD ERECTION DETAILS (SED) SUPERSEDE SIMILAR DETAILS FOUND IN THE ERECTION GUIDES. REFER TO THE ERECTION GUIDES FOR OTHER DETAILS, INSTALLATION PROCEDURES AND ACCESSORIES NOT DESCRIBED IN THE SED'S.
2. ALL PANEL AND TRIM SURFACES MUST BE FREE OF DIRT AND OIL AT MASTIC AND SEALANT LOCATIONS.

RC00A1V1 4/19/2005

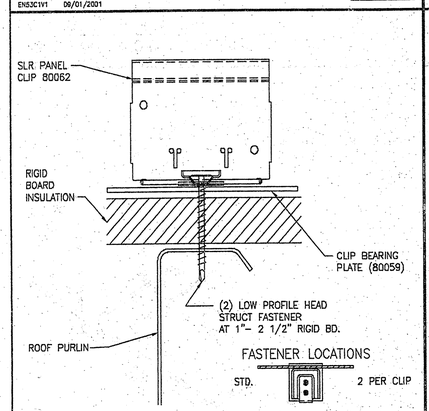

SLR PANEL CLIP ATTACHMENT — RC01T4

RIGID BOARD INSULATION

RC01T4V2 R 08/13/2007

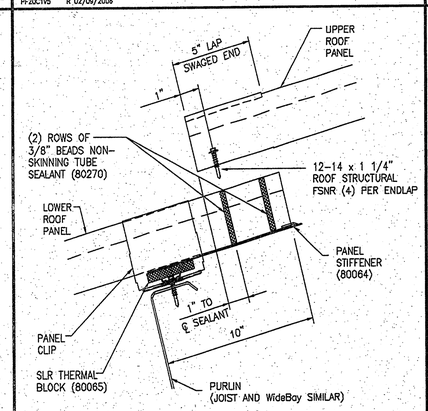

SLR ROOF PANEL ENDLAP — RC02J1

ON PURLINS

RC02J1V8 R 08/01/2005

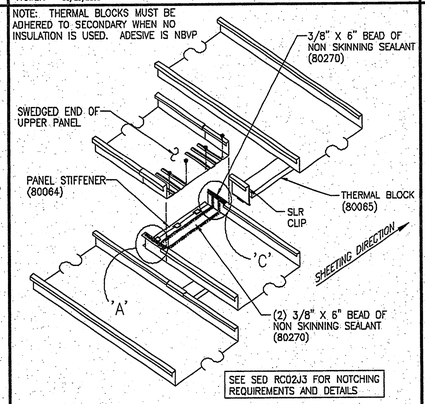

SLR STAGGERED PANEL ENDLAP — RC02J2

ISOMETRIC VIEW

RC02J2V8 R 08/01/2005

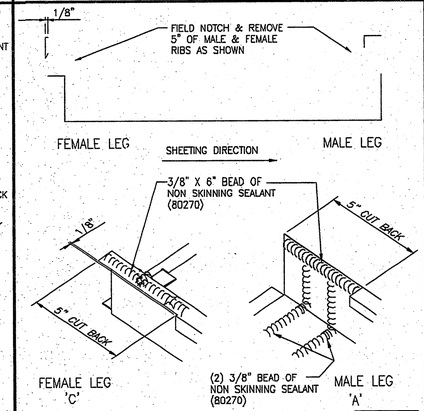

SLR ENDLAP AND NOTCH DETAILS — RC02J3

RC02J3V1 08/01/2005

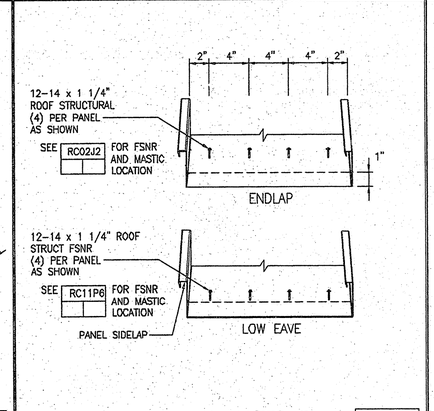

SLR ROOF FASTENER PATTERNS — RC04D5

STANDARD

RC04D5V5 R 07/08/2006

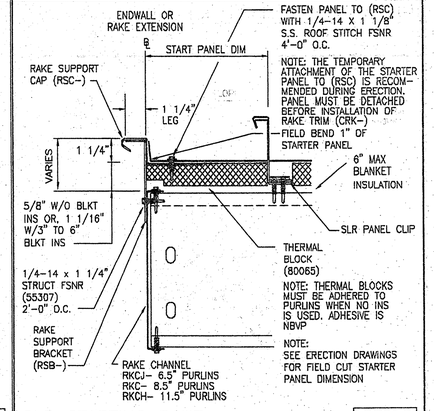

SLR STARTING RAKE — RC10R1

PR, VR OR RPR WALLS (NONE TO 6" BLANKET INS)

RC10R1V4 R 08/15/2006

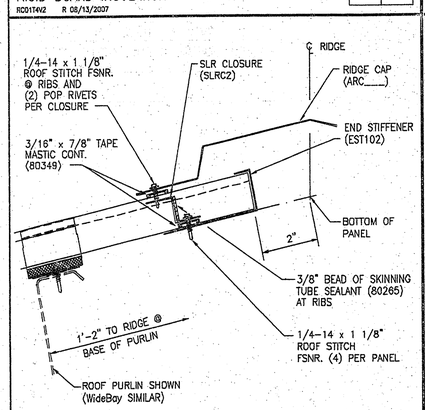

SLR RIDGE COVER — RC12E1

RC12E1V8 R 11/03/2006

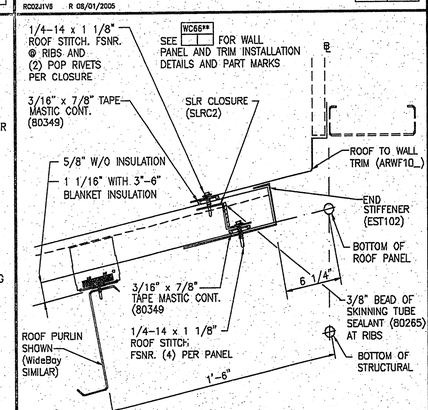

SLR PANEL AT WALL TO ROOF — RC14E1

NO INSULATION OR 3" THRU 6" BLKT. INSULATION

RC14E1V8 R 02/18/07

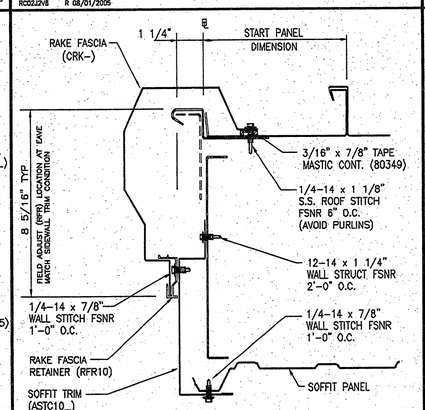

SLR RAKE TRIM WITH SOFFIT — RC30G4

PR, VR OR RPR CANOPY RAKE / ALL ROOF EXT.

RC30G4V2 R 08/15/2006

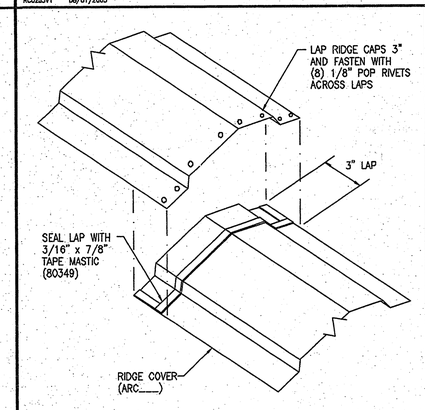

SLR RIDGE COVER — RC34G3

RIDGE CAP END SPLICE DETAIL

RC34G3V5 R 11/03/2006

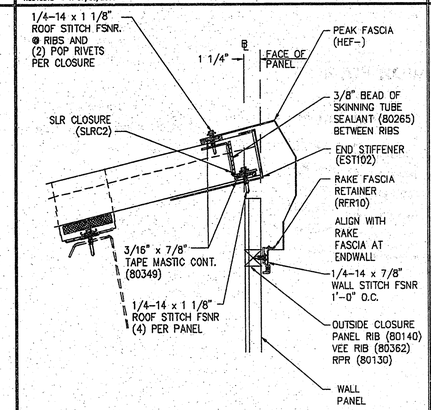

SLR HIGH EAVE FASCIA — RC35F1

PR, VR OR RPR WALL

RC35F1V2 R 08/15/2006

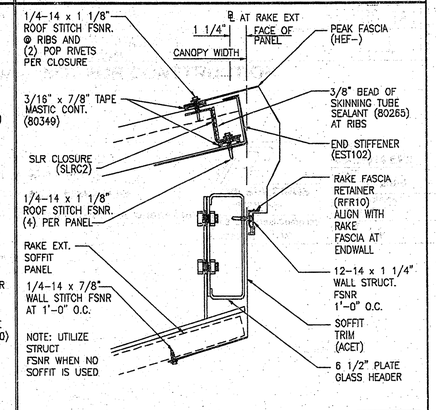

SLR HIGH EAVE FASCIA — RC35F4

PR, VR OR RPR AT RAKE EXT OR CANOPY

RC35F4V5 11/20/2007

FOR APPROVAL- NOT FOR CONSTRUCTION

THE VP ENGINEER'S SEAL APPLIES ONLY TO THE WORK PRODUCT OF VP AND DESIGN AND PERFORMANCE REQUIREMENTS SPECIFIED BY VP. THE VP ENGINEER'S SEAL DOES NOT APPLY TO THE PERFORMANCE OR DESIGN OF ANY OTHER PRODUCT OR COMPONENT FURNISHED BY VP EXCEPT TO ANY DESIGN OR PERFORMANCE REQUIREMENTS SPECIFIED BY VP.

THIS DRAWING, INCLUDING THE INFORMATION HEREON, REMAINS THE PROPERTY OF VP BUILDINGS.

IT IS PROVIDED SOLELY FOR ERECTING THE BUILDING DESCRIBED IN THE APPLICABLE PURCHASE ORDER AND SHALL NOT BE MODIFIED, REPRODUCED OR USED FOR ANY OTHER PURPOSE WITHOUT PRIOR WRITTEN APPROVAL OF VP BUILDINGS.

THE GENERAL CONTRACTOR AND/OR ERECTOR IS SOLELY RESPONSIBLE FOR ACCURATE, GOOD QUALITY WORKMANSHIP IN ERECTING THIS BUILDING IN CONFORMANCE WITH THIS DRAWING, DETAILS REFERENCED IN THIS DRAWING, ALL APPLICABLE VP ERECTION GUIDES, AND INDUSTRY STANDARDS PERTAINING TO PROPER ERECTION, INCLUDING THE CORRECT USE OF TEMPORARY BRACING.

VP Buildings
3200 Players Club Circle Memphis TN 38125

REV	DATE	BY	DESCRIPTION

NTS

BUILDING SED'S

BUILDER	Broadmoor, LLC
CUSTOMER	John F. Stennis Space Center
LOCATION	Stennis Space Center, Mississippi
PROJECT	Riverine and Combatant Craft Operations Facility
BUILDERS PO#	

VP BUILDINGS VARCO PRUDEN — A BluScope Steel Company — VPC VERSION: 7.1c

JOB #	08-28914 EP2
DATE	2/9/2009
DRAWN/CHECK	MWM
PAGE	33

2/9/2009 15:44:37 FILENAME: 08-28914 Cover.VPC