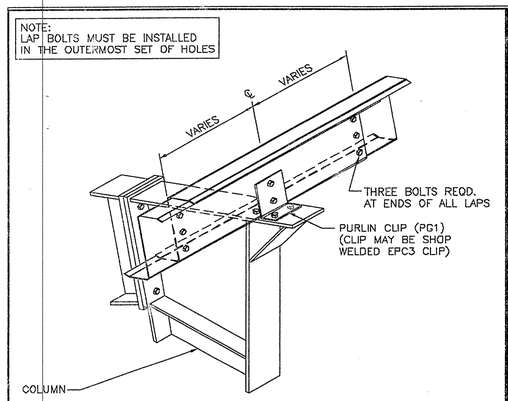

HIGHSIDE PURLIN, INTERIOR FRAME — RS14D1

11 1/2" CONT. PURLINS; PR ROOF

RS14D1V11 R 06/25/2007

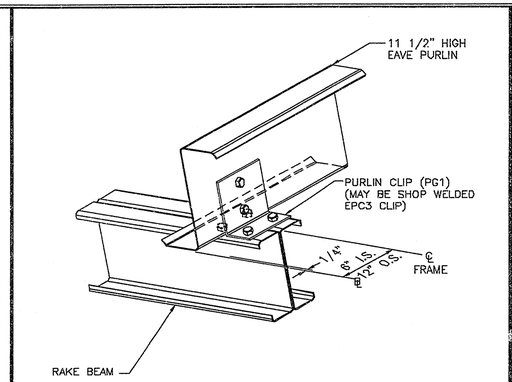

HIGH EAVE PURLIN AT END FRAME — RS14D2

11 1/2" CONTINUOUS / SIMPLE PURLIN

RS14D2V10 R 06/25/2007

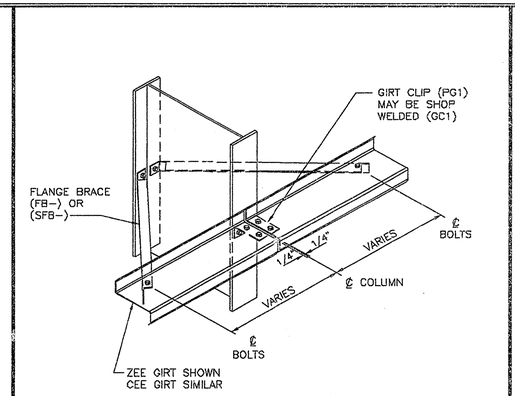

GIRT CONN. AT COLUMN — WS01A2

6 1/2" & 8 1/2" OUTSET SIMPLE GIRTS

WS01A2V8 R 09/28/2005

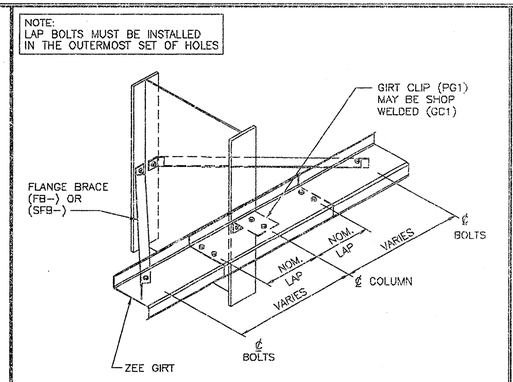

GIRT CONN. AT COLUMN — WS01A3

6 1/2" & 8 1/2" OUTSET CONTINUOUS GIRTS

WS01A3V10 R 09/28/2005

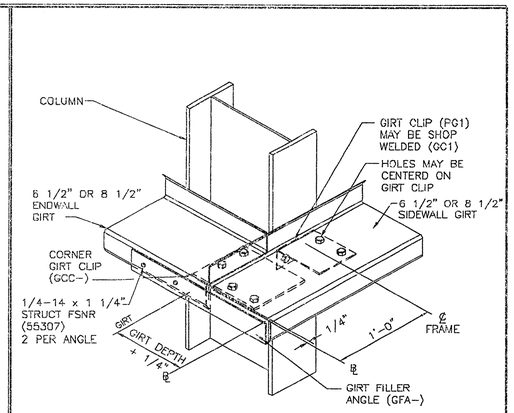

GIRT CONN. AT CORNER COLUMN — WS12D2

ANY OUTSET GIRT AT EW, ANY OUTSET GIRT AT SW

WS12D2V8 R 06/06/2006

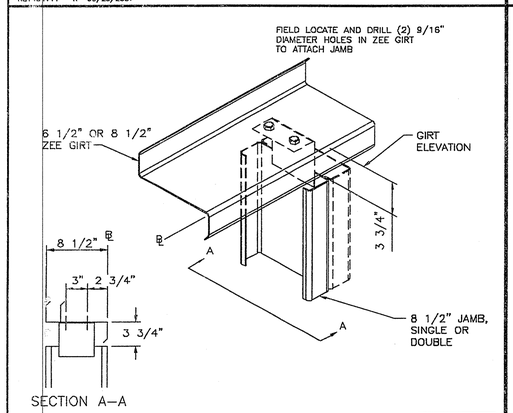

JAMB TO GIRT — WS20A2

8 1/2" JAMB, ANY ZEE GIRT

WS20A2V7 R 06/06/2006

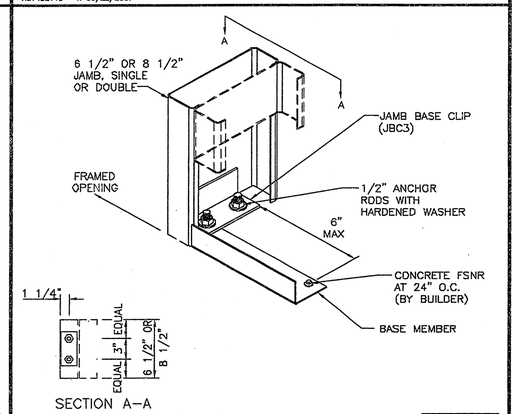

JAMB BASE ATTACHMENT — WS20A8

6 1/2" OR 8 1/2" JAMB

WS20A8V9 R 12/03/2008

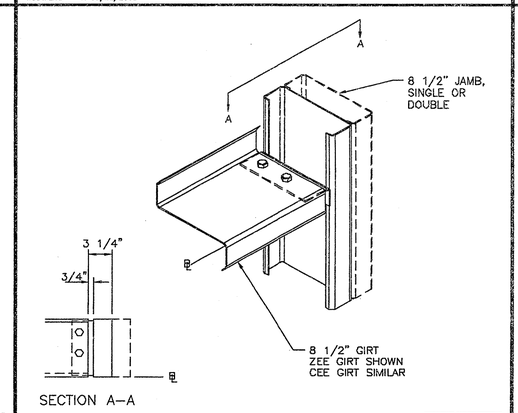

GIRT TO JAMB — WS20D2

8 1/2" GIRT, 8 1/2" JAMB

WS20D2V9 R 4/28/2005

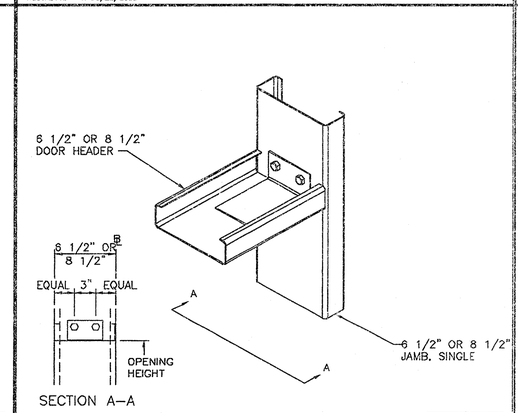

HEADER TO JAMB — WS20D9

ANY HEADER, ANY SINGLE JAMB

WS20D9V6 R 06/06/2006

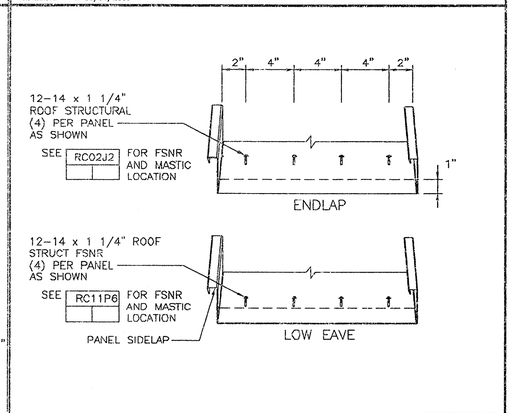

SLR ROOF FASTENER PATTERNS — RC04D5

STANDARD

RC04D5V5 R 07/08/2006

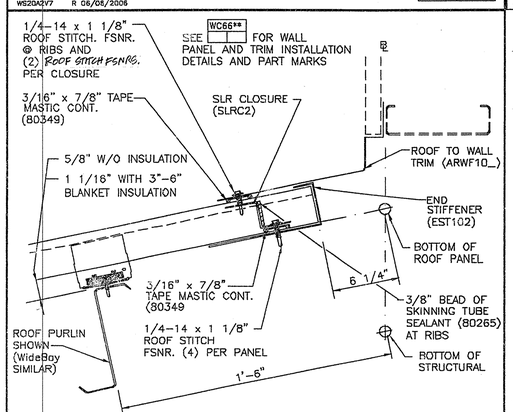

SLR PANEL AT WALL TO ROOF — RC14E1

NO INSULATION OR 3" THRU 6" BLKT. INSULATION

RC14E1V6 R 02/18/07

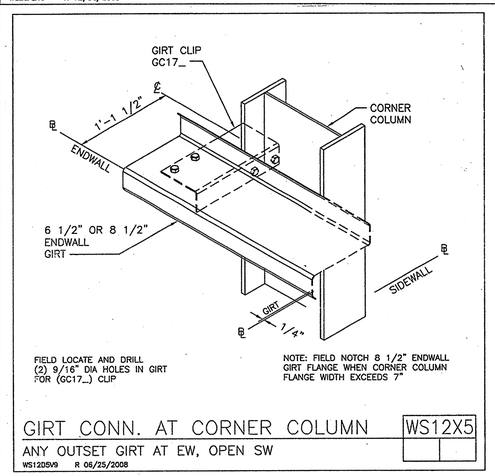

GIRT CONN. AT CORNER COLUMN — WS12X5

ANY OUTSET GIRT AT EW, OPEN SW

WS12D5V9 R 06/25/2008

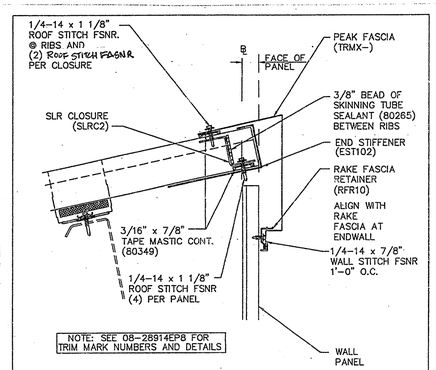

SLR HIGH EAVE FASCIA — RC35FX

PR, VR OR RPR WALL

RC35FV2 R 08/15/2005

THE VP ENGINEER'S SEAL APPLIES ONLY TO THE WORK PRODUCT OF VP AND DESIGN AND PERFORMANCE REQUIREMENTS SPECIFIED BY VP. THE VP ENGINEER'S SEAL DOES NOT APPLY TO THE PERFORMANCE OR DESIGN OF ANY OTHER PRODUCT OR COMPONENT FURNISHED BY VP EXCEPT TO ANY DESIGN OR PERFORMANCE REQUIREMENTS SPECIFIED BY VP.

THIS DRAWING, INCLUDING THE INFORMATION HEREON, REMAINS THE PROPERTY OF VP BUILDINGS.

IT IS PROVIDED SOLELY FOR ERECTING THE BUILDING DESCRIBED IN THE APPLICABLE PURCHASE ORDER AND SHALL NOT BE MODIFIED, REPRODUCED OR USED FOR ANY OTHER PURPOSE WITHOUT PRIOR WRITTEN APPROVAL OF VP BUILDINGS.

THE GENERAL CONTRACTOR AND/OR ERECTOR IS SOLELY RESPONSIBLE FOR ACCURATE, GOOD QUALITY WORKMANSHIP IN ERECTING THIS BUILDING IN CONFORMANCE WITH THIS DRAWING, DETAILS REFERENCED IN THIS DRAWING, ALL APPLICABLE VP ERECTION GUIDES, AND INDUSTRY STANDARDS PERTAINING TO PROPER ERECTION, INCLUDING THE CORRECT USE OF TEMPORARY BRACING.

VP Buildings

3200 Players Club Circle Memphis TN 38125

REV	DATE	BY	DESCRIPTION

NTS

BUILDING SED'S

BUILDER	Broadmoor, LLC
CUSTOMER	John F. Stennis Space Center
LOCATION	Stennis Space Center, Mississippi
PROJECT	Riverine and Combatant Craft Operations Facility
BUILDERS PO#	

VP BUILDINGS
VARCO PRUDEN
A BlueScope Steel Company
VPC VERSION: 7.11

JOB NO	08-28914EP3
DATE	4/30/09
DRAWN/CHECK	BR BR
PAGE	30