11 1/2" PURLINS REQUIRE 3 BOLTS AT EACH END OF PURLIN LAP.

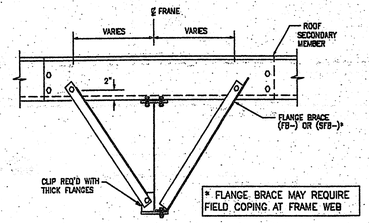

* FLANGE BRACE MAY REQUIRE FIELD COPING AT FRAME WEB

FLANGE BRACE REQUIREMENTS:

RULE#1– ALL FLANGE BRACES ON CROSS SECTIONS MUST BE INSTALLED.
RULE#2– SINGLE FLANGE BRACES ARE REQUIRED WHEN PART MARK ON CROSS SECTION IS NOT ACCOMPANIED BY (2).
RULE#3– FLANGE BRACES ARE REQUIRED BOTH SIDES OF THE FRAME WEB WHEN PART MARK IS ACCOMPANIED BY (2).
RULE#4– WHENEVER POSSIBLE, PLACE SINGLE BRACES TOWARD THE CENTER OF THE BUILDING.
RULE#5– WHENEVER POSSIBLE, PLACE ALL SINGLE BRACES ON THE SAME SIDE OF THE FRAME WEB.

TYPICAL FLANGE BRACE CONNECTIONS — BR06BD

CONTINUOUS PURLIN LAP SHOWN, CONTINOUS GIRT AND SINGLE PURLIN AND GIRT SIMILAR.

BR06BDV7 R 11/10/2005

INSERT SAG ANGLE TAB INTO PURLIN SLOTS AND BEND TAB FLAT.

NOTES:
–WHEN SAG ANGLE SLOTS IN ADJACENT PURLINS DO NOT ALIGN, FIELD BEND THE SAG ANGLE TAB AND ATTACH TO PURLIN WITH A 1/4–14 x 1 1/4" STRUCT FSNR (SS307)
–USE UPPER SET OF SLOTS AT 11 1/2" PURLINS

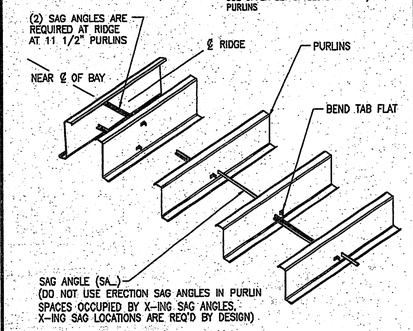

OPTIONAL ERECTION SAG ANGLES — BR09A4

SAG ANGLE INSTALLATION

BR09A4V2 R 08/01/2003

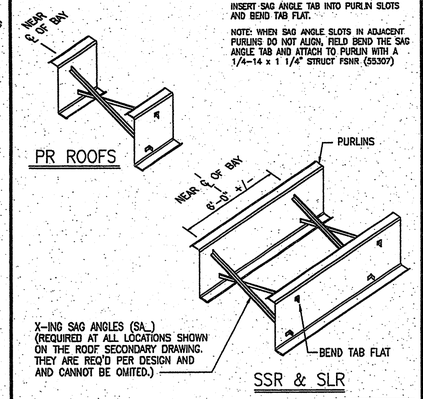

SAG ANGLES X–ING — BR09A5

8 1/2" & 11 1/2" PURLINS (REQ'D. PER DESIGN)

BR09A5V5 R 08/01/2003

PANEL BIB ROOF PANEL MUST BE FASTENED TO SUB PURLINS WITH STRUCTURAL FASTENERS AT STANDARD LOCATIONS (ROOF PANEL DOES NOT ATTACH TO SUB JAMB)

SSR/SLR ROOF PANEL MUST BE FASTENED TO SUB PURLINS WITH CLIPS AT STANDARD LOCATIONS LOCATIONS (ROOF PANEL DOES NOT ATTACH TO SUB JAMB)

WHEN REQUIRED, FELD NOTCH SUB JAMB AT 11 1/2" PURLINS

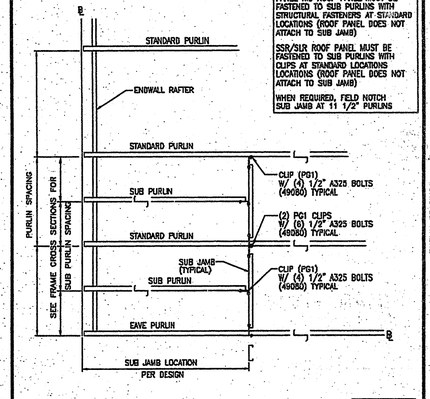

CORNER ZONE BRACING — BR09HE

ROOF PLAN VIEW (JAMB SUPPORT)

BR09HEV1 06/07/2008

PANEL BIB ROOF PANEL MUST BE FASTENED TO SUB PURLINS WITH STRUCTURAL FASTENERS AT STANDARD LOCATIONS

SSR/SLR ROOF PANEL MUST BE FASTENED TO SUB PURLINS WITH CLIPS AT STANDARD LOCATIONS LOCATIONS

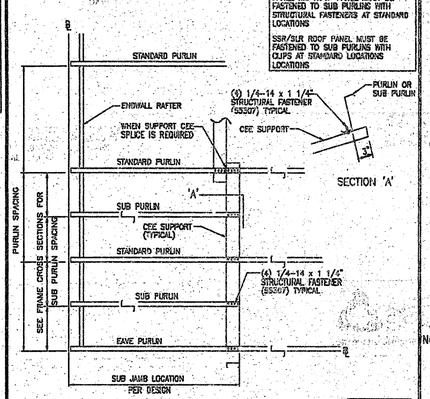

CORNER ZONE BRACING — BR09HF

ROOF PLAN VIEW (CEE SUPPORT)

BR09HFV1 06/07/2008

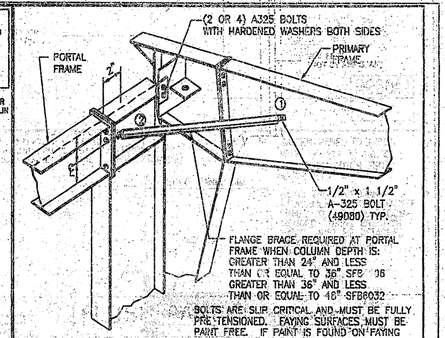

NOTES:
① FIELD DRILL 9/16" HOLES IN PRIMARY AND PORTAL FRAME WEBS FOR FLANGE BRACE CONNECTIONS.
② DRILL 9/16" HOLE IN PORTAL FRAME COLUMN WEB APPROX. 2" FROM BOLTING PLATE @ BEAM ℄.

PORTAL FRAME DETAIL — BR12F1

CONNECTION TO FRAME

BR12F1V4 R 11/28/2007

CAUTION: EXTREME CARE SHOULD BE USED WHILE OPERATING SEAMING MACHINE NEAR EDGES OF ROOF.

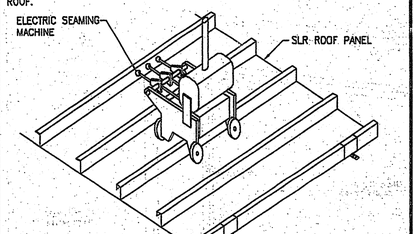

IN PREPARATION OF THE SEAMING OPERATION, ALL CONSTRUCTION DEBRIS SHOULD BE REMOVED FROM THE ROOF TO PREVENT MACHINE DAMAGE AND/OR ROOF DAMAGE.

ALL EXCESS SEALANT SHOULD BE REMOVED FROM THE SLR RIBS. REFER TO THE OWNERS MANUAL (INCLUDED WITH THE SEAMING MACHINE) FOR SAFE AND PRACTICAL SEAMING OPERATIONS.

SLR SEAMING MACHINE DETAIL — EN01A1

SLR ROOF

EN01A1V4 R 10/19/2005

IT IS THE RESPONSIBILITY OF THE ERECTOR TO INSURE PROPER SEAM TIGHTNESS. FAILURE TO PROPERLY SEAM THE JOINT MAY RESULT IN PREMATURE FAILURE OF PANELS AND/OR SECONDARY MEMBERS UNDER UPLIFT OR DOWNWARD LOADING CONDITIONS.

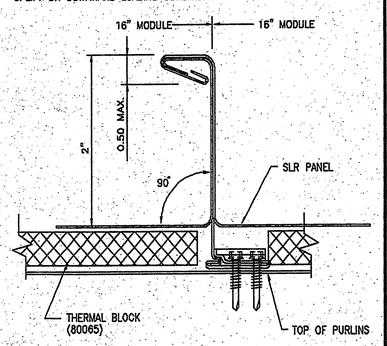

SLR SEAMING GUIDELINES — EN01A2

RIB & SEAM PROFILE

EN01A2V5 R 07/23/2007

IT IS IMPERATIVE THAT THE FRAMING BE PLUMB AND SQUARE BEFORE INSTALLING ANY SLR ROOF PANELS.

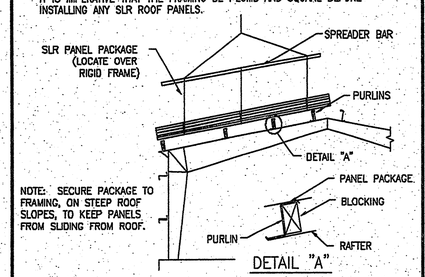

NOTE: SECURE PACKAGE TO FRAMING, ON STEEP ROOF SLOPES, TO KEEP PANELS FROM SLIDING FROM ROOF.

TO FACILITATE THE HANDLING OF SLR PANELS, PANEL PACKAGES CAN BE LIFTED AND PLACED ON THE ROOF IF LOCATED AT A RIGID FRAME AND WITH BLOCKING IN PLACE TO PREVENT THE PURLINS FROM ROLLING OVER. WHEN LIFTING PACKAGED SHEETS, MAKE CERTAIN THAT THEY ARE ADEQUATELY SUPPORTED, PANELS LESS THAN 20' IN LENGTH CAN NORMALLY BE LIFTED WITH A FORKLIFT: HOWEVER, WHEN LIFTING PANELS IN EXCESS OF 20', IT IS RECOMMENDED THAT A SPREADER BAR AND SLINGS BE USED. AS A RULE WHEN LIFTING, NO MORE THAN 1/3 OF THE PANEL SHOULD BE LEFT UNSUPPORTED.

SLR PANEL PACKAGE HANDLING — EN01A3

EN01A3V1 05/01/95

GABLE BUILDINGS W/OUT PANEL ENDLAPS CAN BE SHEETED SIMUTANEOUSLY FROM EITHER END OF BUILDING. HOWEVER, IF THE BUILDING HAS PANEL ENDLAPS, THE ROOF MUST BE SHEETED LEFT TO RIGHT LOOKING UP SLOPE.

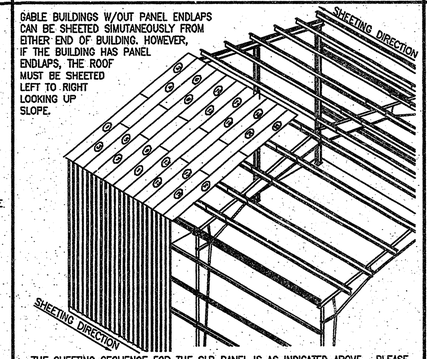

THE SHEETING SEQUENCE FOR THE SLR PANEL IS AS INDICATED ABOVE. PLEASE NOTE THE PLACEMENT OF THE PANELS BY THE CIRCLED NUMBERS. THE UPHILL PANEL AT AN ENDLAP WILL BE SWEDGED ON THE LOWER END FOR NESTING PURPOSES. ENDLAPS OF ADJACENT PANELS MUST BE STAGGERED AT LEAST ONE PURLIN SPACE TO PREVENT MATERIAL BUILD–UP.

SLR PANEL LAYOUT — EN01A4

SHEETING DIRECTION AND PANEL SEQUENCE

EN01A4V1 05/01/95

SELF DRILLING FASTENER OR BOLT AT CENTERLINE OF PURLIN OR HIGHER. FIELD DRILL HOLES.

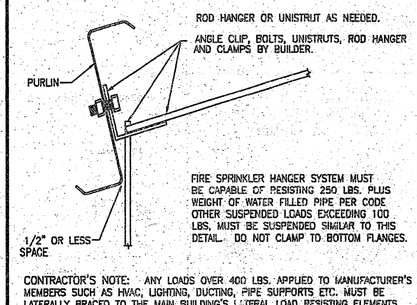

CONTRACTOR'S NOTE: ANY LOADS OVER 400 LBS. APPLIED TO MANUFACTURER'S MEMBERS SUCH AS HVAC, LIGHTING, DUCTING, PIPE SUPPORTS ETC. MUST BE LATERALLY BRACED TO THE MAIN BUILDING'S LATERAL LOAD RESISTING ELEMENTS (PURLIN BRACING STRUTS OR PRIMARY FRAMES) AS REQUIRED BY CODE FOR SEISMIC LOADS. BRACING MUST BE PROVIDED AND INSTALLED BY CONTRACTOR AND MUST RESIST LATERAL LOADS EQUAL TO THE WEIGHT OF THE SUSPENDED UNIT OR AS REQUIRED BY CODE, WHICHEVER IS LESS.

SUSPENDED LOADS — EN10A1

FROM PURLINS – 100 LB. LOADS OR GREATER

EN10A1V4 R 08/11/2005

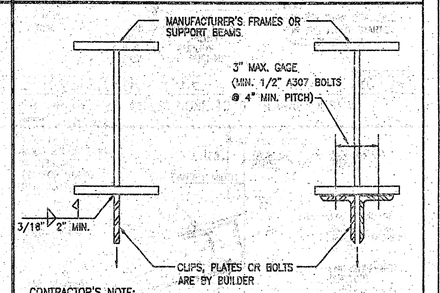

CONTRACTOR'S NOTE:
FIELD DRILL OR FIELD WELD SUSPENSION ANGLES OR PLATES.
ALLOWABLE LOAD = 1 KIP PER PAIR OF BOLTS
= 1.4 KIPS PER INCH OF WELD WITHOUT INSPECTION
= 2.8 KIPS PER INCH OF WELD WITH INSPECTION
ADD PAIRS OF BOLTS OR INCHES OF WELD TO RESIST DESIRED CONCENTRATED LOAD. LOADS LESS THAN 500 LBS MAY BE SUSPENDED USING CLAMPS. (1 1/2" FROM EDGE OF FLANGE). CONCENTRATED LOADS SHALL NOT EXCEED USER DEFINED COLLATERAL LOADING INDICATED ON THE PURCHASE ORDER AND IN MFG'S. CALCULATIONS.

SUSPENDED LOADS — EN10A2

FROM STRUCTURAL BEAMS

EN10A2V2 R 08/11/2005

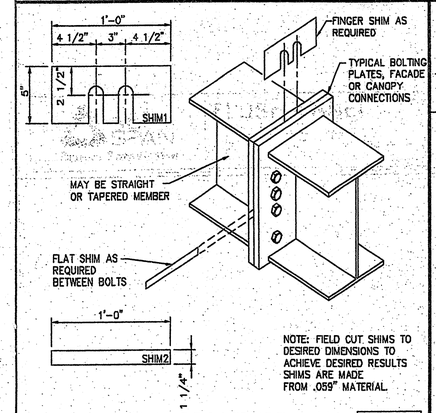

NOTE: FIELD CUT SHIMS TO DESIRED DIMENSIONS TO ACHIEVE DESIRED RESULTS SHIMS ARE MADE FROM .059" MATERIAL.

STANDARD SHIM PROCEDURE — EN20A1

TYPICAL AT ANY BOLTED CONNECTION

EN20A1V2 R 06/31/88

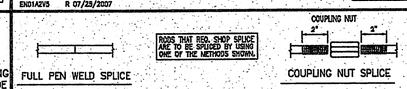

"SHOP SPLICE DETAILS"

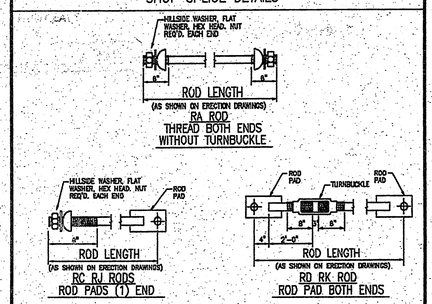

ROD BRACE ASSEMBLY DRAWING — EN30A1

EN30A1V6 R 05/18/2006

F = FEET G = GAGE
I = INCHES D = OPERATION
E = EIGHTHS C = FIN/COLOR

PANEL/COVERING
V1311726 1KTD
*FFIIEGGDCCC
LENGTH CODE

INSULATION
IB1301036030WV
**FFFIIIIIIECC
LENGTH WIDTH THK CODE

SECONDARY (STANDARD)
01G191141 7
***FFIIEGG
LENGTH CODE

SECONDARY (SPECIAL)
001G191141 7
****FFIIEGG
LENGTH CODE

ROD BRACING
03RA2510
IE**FFII
DIA LENGTH

CX*** = COLUMN (PLATE)
CGX*** = COLUMN (GAGE)
WCX*** = COLUMN (HOTROLL)

RBX*** = RAFTER (PLATE)
BGX*** = RAFTER (GAGE)
WRX*** = RAFTER (HOTROLL)
TRX*** = TRUSS RAFTER

ICX*** = INTERIOR COLUMN
PCX*** = PIPE COLUMN
TCX*** = TUBE COLUMN

EPX*** = ENDPOST (PLATE)
EGX*** = ENDPOST (GAGE)

CBX*** = CANOPY (PLATE)
DCCBX*** = CANOPY (GAGE)
CBX*** = PIGGYBACK CANOPY

MARK NUMBER KEY — EN50A1

COMMON GENERATED MARK NUMBERS

EN50A1V5 R 11/04/2005

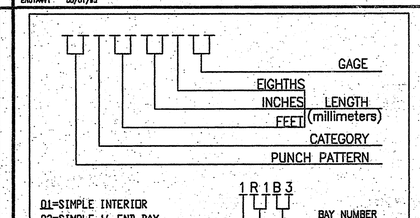

01=SIMPLE INTERIOR
02=SIMPLE 1' END BAY
03=SIMPLE 6' END BAY
04=END HOLE ONLY
05=INSET NOTCH
06=NO HOLES

THE BAY/BUNDLE CODE IDENTIFIES THE BUILDING ROOF/WALL PLANE AND BAY

LAP	6' END BAY	1' END BAY	INTERIOR BAY	MEMBER DEPTHS
1'–0"	20	30	40	6 1/2", 8 1/2"
1'–6"	21	31	41	6 1/2", 8 1/2"
2'–0"	22	32	42	6 1/2", 8 1/2", 11 1/2"
3'–0"	24	34	44	6 1/2", 8 1/2", 11 1/2"
4'–0"	26	36	46	6 1/2", 8 1/2", 11 1/2"

SECONDARY PUNCH PATTERNS — EN51A1

COMMON GENERATED MARK NUMBERS

EN51A1V2 R 03/18/2005

F = FEET G = GAGE
I = INCHES D = OPERATION
E = EIGHTHS C = FIN/COLOR

SLR2 ROOF PANEL MARK NO.: RS2 FFIIEGGDCCC
LENGTH CODE

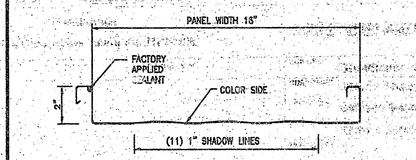

SLR2 ROOF PANELS — EN52E1

EN52E1V2 R 09/22/2004

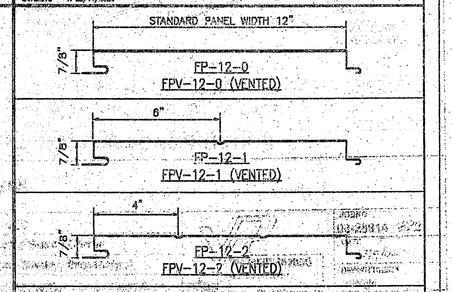

F = FEET G = GAGE
I = INCHES D = OPERATION
E = EIGHTHS C = FIN/COLOR

PANEL/COVERING
FP_1311724 1AEW
FFIIEGGDCCC
LENGTH CODE
OF BEADS

PANEL/COVERING (ALUMINUM)
FPV_1311721 1LEW
FFIIEGGDCCC
LENGTH CODE
OF BEADS

FP–12 PANELS — EN52H1

EN52H1V1 10/31/2007

FOR APPROVAL- NOT FOR CONSTRUCTION

THE VP ENGINEER'S SEAL APPLIES ONLY TO THE WORK PRODUCT OF VP AND DESIGN AND PERFORMANCE REQUIREMENTS SPECIFIED BY VP. THE VP ENGINEER'S SEAL DOES NOT APPLY TO THE PERFORMANCE OR DESIGN OF ANY OTHER PRODUCT OR COMPONENT FURNISHED BY VP EXCEPT TO ANY DESIGN OR PERFORMANCE REQUIREMENTS SPECIFIED BY VP.

THIS DRAWING, INCLUDING THE INFORMATION HEREON, REMAINS THE PROPERTY OF VP BUILDINGS.

IT IS PROVIDED SOLELY FOR ERECTING THE BUILDING DESCRIBED IN THE APPLICABLE PURCHASE ORDER AND SHALL NOT BE MODIFIED, REPRODUCED OR USED FOR ANY OTHER PURPOSE WITHOUT PRIOR WRITTEN APPROVAL OF VP BUILDINGS.

THE GENERAL CONTRACTOR AND/OR ERECTOR IS SOLELY RESPONSIBLE FOR ACCURATE, GOOD QUALITY WORKMANSHIP IN ERECTING THIS BUILDING IN CONFORMANCE WITH THIS DRAWING, DETAILS REFERENCED IN THIS DRAWING, ALL APPLICABLE VP ERECTION GUIDES, AND INDUSTRY STANDARDS PERTAINING TO PROPER

VP Buildings
3200 Players Club Circle Memphis TN 38125

REV	DATE	BY	DESCRIPTION

BUILDING SED'S

BUILDER	Broadmoor, LLC
CUSTOMER	John F. Stennis Space Center
LOCATION	Stennis Space Center, Mississippi
PROJECT	Riverine and Combatant Craft Operations Facility

VP BUILDINGS
VARCO PRUDEN
A Subsidiary of Nucor Steel Company

JOB NO	08-2891.1 EPI
DATE	2/12/2009
DRAWN/CHECK	MWM
PAGE	