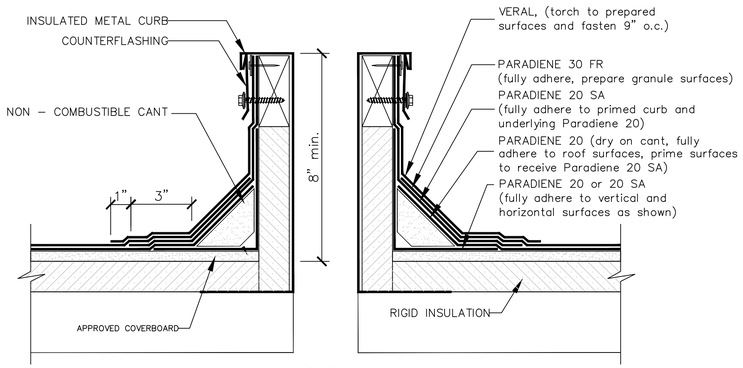

CURB DETAIL

N.T.S.

NOTES:
1. PREPARE GRANULE SURFACES UNDER FLASHING BY TORCH PREPARATION.
2. WHERE PRIMER IS INDICATED TO MAINTAIN PROPER ADHESION, TA–119 PRIMER IS REQUIRED FOR ALL PARADIENE 20 SA FLASHING REINFORCING AND STRIPPING PLY APPLICATIONS. USE PA–1125 OR PA–917 LS FOR ALL NON–PARADIENE 20 SA APPLICATIONS. CONTACT SIPLAST FOR SPECIFIC REQUIREMENTS.
3. THE CARPENTRY AND METAL WORK SHOWN DEPICTS SHOP FABRICATION AND JOB–SITE ASSEMBLY. THESE COMPONENTS SHOULD BE DESIGNED/FABRICATED/INSTALLED ACCORDING TO GENERALLY ACCEPTED INDUSTRY PRACTICES, STANDARDS, AND APPROVALS.
4. DISSIMILAR METAL TYPES SUBJECT TO ELECTROLYTIC REACTION SHOULD BE PHYSICALLY SEPARATED.
5. REQUIREMENTS AND RECOMMENDATIONS DETAILED IN SIPLAST SPECIFICATIONS SHALL APPLY IN ADDITION TO THE ABOVE DRAWING.

TYP. CURB DETAIL

SCALE: NTS

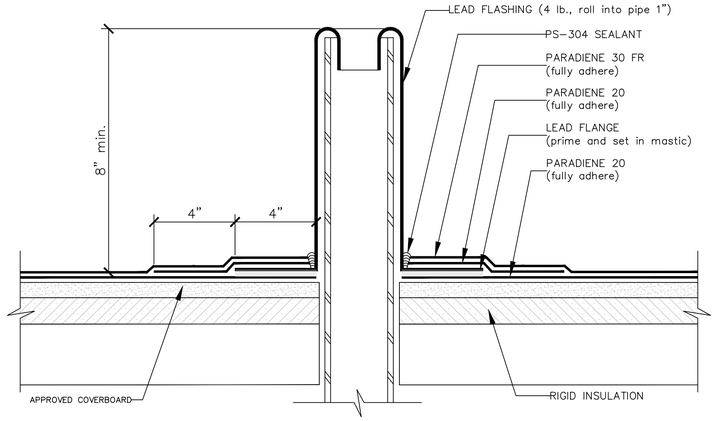

WASTE STACK DETAIL

N.T.S.

NOTES:
1. WHERE PRIMER IS INDICATED TO MAINTAIN PROPER ADHESION, TA–119 PRIMER IS REQUIRED FOR ALL PARADIENE 20 SA FLASHING REINFORCING AND STRIPPING PLY APPLICATIONS. USE PA–1125 OR PA–917 LS FOR ALL NON–PARADIENE 20 SA APPLICATIONS. CONTACT SIPLAST FOR SPECIFIC REQUIREMENTS.
2. REQUIREMENTS AND RECOMMENDATIONS DETAILED IN SIPLAST SPECIFICATIONS SHALL APPLY IN ADDITION TO THE ABOVE DRAWING.

CAUTION: SIPLAST RECOMMENDS THAT ALL PRACTICES PERTAINING TO NRCA CERTA GUIDELINES BE FOLLOWED WHEN TORCHING METHODS ARE EMPLOYED. THIS INCLUDES PERFORMING A FIRE WATCH FOLLOWING ANY TORCH APPLICATIONS. ALWAYS HAVE APPROVED FIRE–EXTINGUISHING EQUIPMENT NEARBY.

TYP. WASTE STACK DETAIL

SCALE: NTS

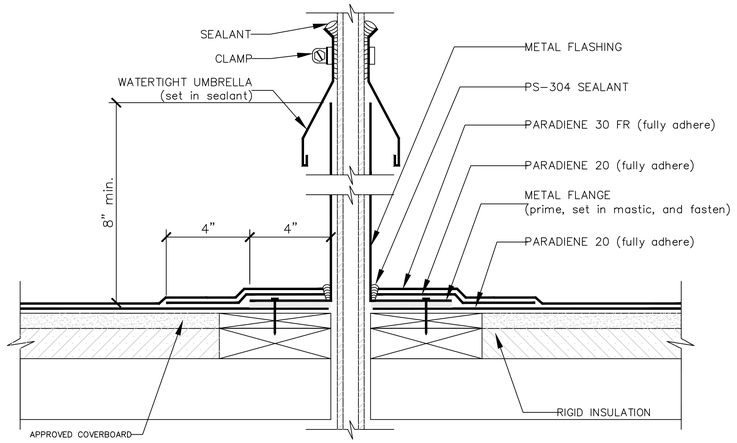

CONDUIT/SMALL PIPE PENETRATION DETAIL

N.T.S.

NOTES:
1. WHERE PRIMER IS INDICATED TO MAINTAIN PROPER ADHESION, TA–119 PRIMER IS REQUIRED FOR ALL PARADIENE 20 SA FLASHING REINFORCING AND STRIPPING PLY APPLICATIONS. USE PA–1125 OR PA–917 LS FOR ALL NON–PARADIENE 20 SA APPLICATIONS. CONTACT SIPLAST FOR SPECIFIC REQUIREMENTS.
2. THE CARPENTRY AND METAL WORK SHOWN DEPICT SHOP FABRICATION AND JOB–SITE ASSEMBLY. THESE COMPONENTS SHOULD BE DESIGNED/FABRICATED/INSTALLED ACCORDING TO GENERALLY ACCEPTED INDUSTRY PRACTICES, STANDARDS, AND APPROVALS.
3. DISSIMILAR METAL TYPES SUBJECT TO ELECTROLYTIC REACTION SHOULD BE PHYSICALLY SEPARATED.
4. REQUIREMENTS AND RECOMMENDATIONS DETAILED IN SIPLAST SPECIFICATIONS SHALL APPLY IN ADDITION TO THE ABOVE DRAWING.

CAUTION: SIPLAST RECOMMENDS THAT ALL PRACTICES PERTAINING TO NRCA CERTA GUIDELINES BE FOLLOWED WHEN TORCHING METHODS ARE EMPLOYED. THIS INCLUDES PERFORMING A FIRE WATCH FOLLOWING ANY TORCH APPLICATIONS. ALWAYS HAVE APPROVED FIRE–EXTINGUISHING EQUIPMENT NEARBY.

TYP. CONDUIT/SMALL PIPE PENETRATION

SCALE: NTS

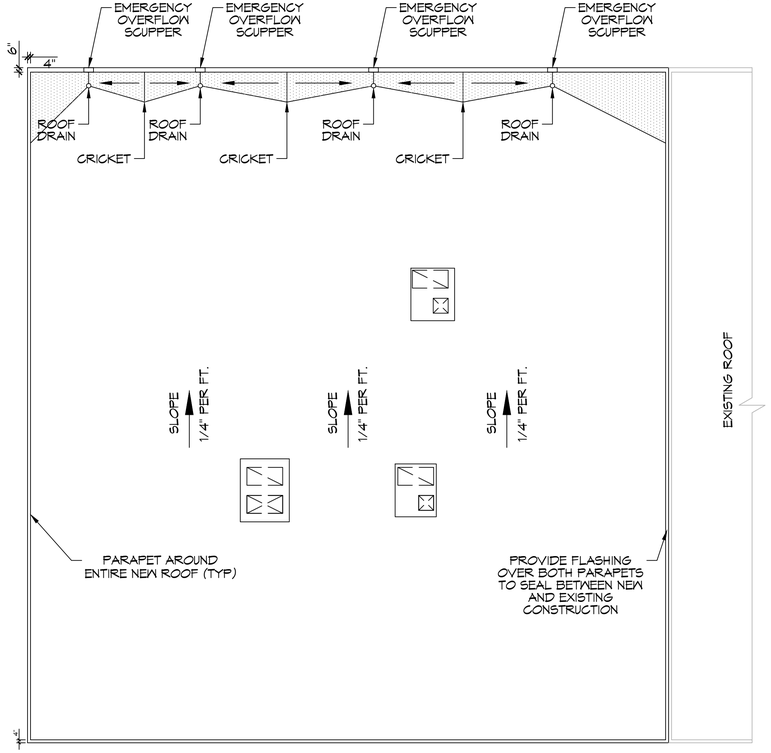

ROOF PLAN

SCALE: 1/8" = 1'-0"

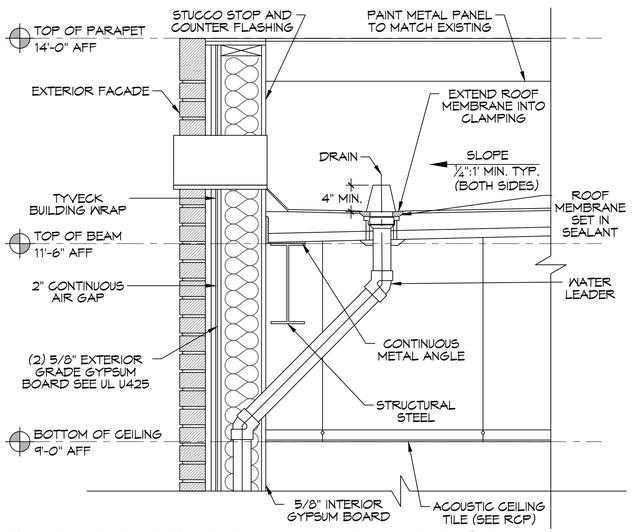

TYP. ROOF DRAIN & SCUPPER

SCALE: NTS

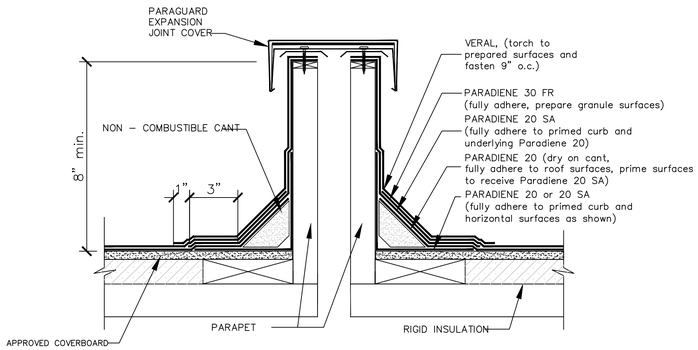

NOTES:
1. REFER TO THE PARAGUARD ROOF PERIMETER SYSTEM INSTALLER'S GUIDE FOR INFORMATION ON PRODUCTS, SIZING, AND INSTALLATION OF THE PARAGUARD SYSTEM.
2. WHERE PRIMER IS INDICATED TO MAINTAIN PROPER ADHESION, TA–119 PRIMER IS REQUIRED FOR ALL PARADIENE 20 SA FLASHING REINFORCING AND STRIPPING PLY APPLICATIONS. USE PA–1125 OR PA–917 LS FOR ALL NON–PARADIENE 20 SA APPLICATIONS. CONTACT SIPLAST FOR SPECIFIC REQUIREMENTS.
3. PREPARE GRANULE SURFACES UNDER FLASHING BY TORCH PREPARATION.
4. THE CARPENTRY WORK SHOWN DEPICTS SHOP FABRICATION AND JOB–SITE ASSEMBLY. THESE COMPONENTS SHOULD BE DESIGNED/FABRICATED/INSTALLED ACCORDING GENERALLY ACCEPTED INDUSTRY PRACTICES, STANDARDS, AND APPROVALS.
5. DISSIMILAR METAL TYPES SUBJECT TO ELECTROLYTIC REACTION SHOULD BE PHYSICALLY SEPARATED.
6. REQUIREMENTS AND RECOMMENDATIONS DETAILED IN SIPLAST SPECIFICATIONS SHALL APPLY IN ADDITION TO THE ABOVE DRAWING.

CAUTION: SIPLAST RECOMMENDS THAT ALL PRACTICES PERTAINING TO NRCA CERTA GUIDELINES BE FOLLOWED WHEN TORCHING METHODS ARE EMPLOYED. THIS INCLUDES PERFORMING A FIRE WATCH FOLLOWING ANY TORCH APPLICATIONS. ALWAYS HAVE APPROVED FIRE–EXTINGUISHING EQUIPMENT NEARBY.

TYP. FLASHING BETWEEN BUILDINGS

SCALE: NTS

DAMMON ENGINEERING, INC.
LOUISIANA & MISSISSIPPI
www.dammonengineering.com
info@dammonengineering.com
PH: 985.649.3832
Chief Engineer: Brian Mistich, PE
554 Old Spanish Trail
Slidell, LA 70458

#	DESCRIPTION	DATE

REVISIONS

SEAL:

BID SET NOT FOR CONSTRUCTION

NEW ADDITION
HONTAS MOB

71211 LA HWY 21
COVINGTON, LA 70433

JOB No: 2443
DATE: 10-20-2021
DRAWN BY: DPD
CHECKED BY: CKD

The drawings, specifications and other documents, including electronic media, prepared by Dammon Engineering, are the sole property of Dammon Engineering, and are not to be used for any purpose other than the specific project for which the plans have been prepared and developed without written consent of Dammon Engineering. Any reproduction or distribution of these documents or any portion thereof without written consent of Dammon Engineering is prohibited.

SHEET TITLE: ROOF PLAN

DRAWING NUMBER: A103

SHEET No: 10 of 16

FILE NAME: J:_Hospitals - Medical - Dental\2443 - Hontas MOB Addition\Drawings\Current Drawings\A103 - ROOF PLAN.dwg PLOT DATE & TIME: Friday, October 22, 2021 8:29:25 AM