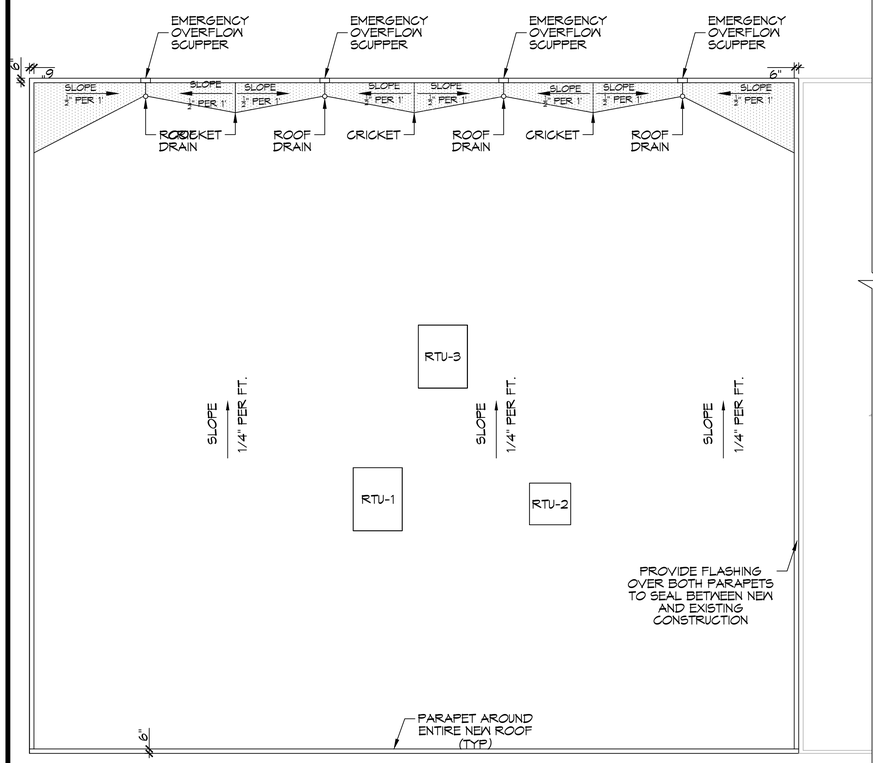

2 ROOF PLAN
SCALE: 1/8 = 1'-0"

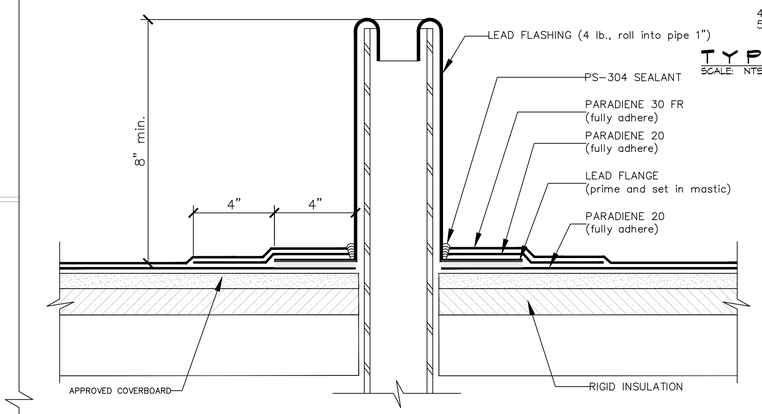

NOTES: 1. WHERE PRIMER IS INDICATED TO MAINTAIN PROPER ADHESION, TA-119 PRIMER IS REQUIRED FOR ALL PARADIENE 20 SA FLASHING REINFORCING AND STRIPPING PLY APPLICATIONS. USE PA-1125 OR PA-917 LS FOR ALL NON-PARADIENE 20 SA APPLICATIONS. CONTACT SIPLAST FOR SPECIFIC REQUIREMENTS.
2. REQUIREMENTS AND RECOMMENDATIONS DETAILED IN SIPLAST SPECIFICATIONS SHALL APPLY IN ADDITION TO THE ABOVE DRAWING.

CAUTION: SIPLAST RECOMMENDS THAT ALL PRACTICES PERTAINING TO NRCA CERTA GUIDELINES BE FOLLOWED WHEN TORCHING METHODS ARE EMPLOYED. THIS INCLUDES PERFORMING A FIRE WATCH FOLLOWING ANY TORCH APPLICATIONS. ALWAYS HAVE APPROVED FIRE-EXTINGUISHING EQUIPMENT NEARBY.

TYP. WASTE STACK DETAIL
SCALE: NTS

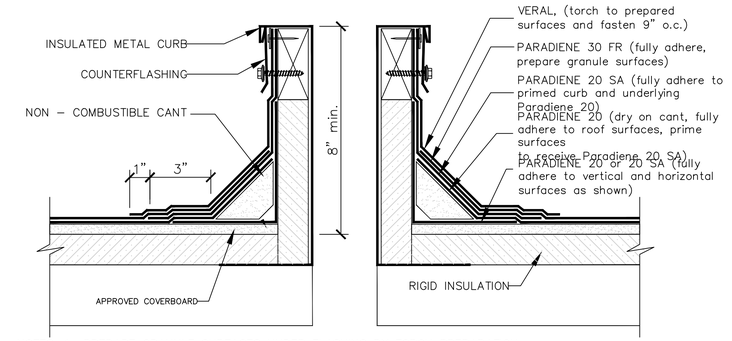

NOTES: 1. PREPARE GRANULE SURFACES UNDER FLASHING BY TORCH PREPARATION.
2. WHERE PRIMER IS INDICATED TO MAINTAIN PROPER ADHESION, TA-119 PRIMER IS REQUIRED FOR ALL PARADIENE 20 SA FLASHING REINFORCING AND STRIPPING PLY APPLICATIONS. USE PA-1125 OR PA-917 L FOR ALL NON-PARADIENE 20 SA APPLICATIONS. CONTACT SIPLAST FOR SPECIFIC REQUIREMENTS.
3. THE CARPENTRY AND METAL WORK SHOWN DEPICTS SHOP FABRICATION AND JOB-SITE ASSEMBLY. THESE COMPONENTS SHOULD BE DESIGNED/FABRICATED/INSTALLED ACCORDING TO GENERALLY ACCEPTED INDUSTRY PRACTICES, STANDARDS, AND APPROVALS.
4. DISSIMILAR METAL TYPES SUBJECT TO ELECTROLYTIC REACTION SHOULD BE PHYSICALLY SEPARATED.
5. REQUIREMENTS AND RECOMMENDATIONS DETAILED IN SIPLAST SPECIFICATIONS SHALL APPLY IN ADDITION TO THE ABOVE DRAWING.

TYP. CURB DETAIL
SCALE: NTS

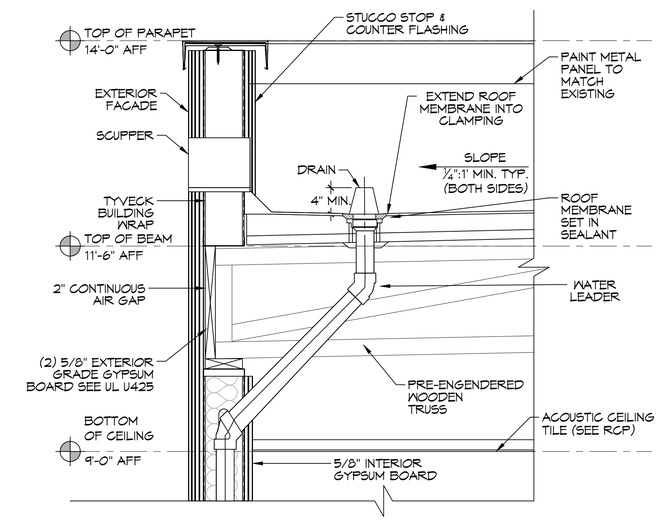

TYP. ROOF DRAIN & SCUPPER
SCALE: NTS

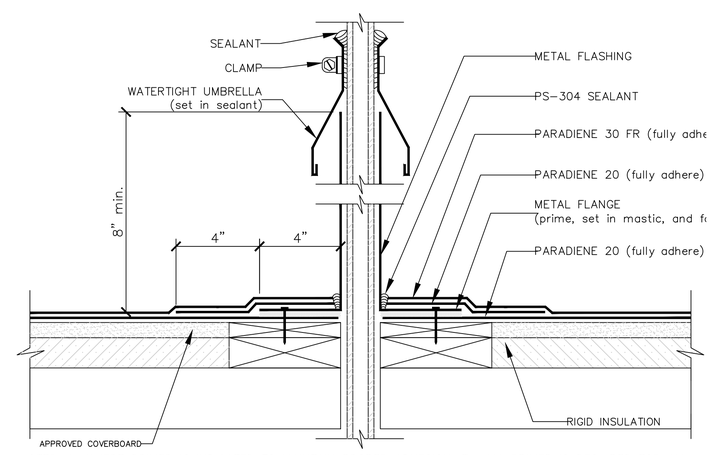

NOTES: 1. WHERE PRIMER IS INDICATED TO MAINTAIN PROPER ADHESION, TA-119 PRIMER IS REQUIRED FOR ALL PARADIENE 20 SA FLASHING REINFORCING AND STRIPPING PLY APPLICATIONS. USE PA-1125 OR PA-917 LS FOR ALL NON-PARADIENE 20 SA APPLICATIONS. CONTACT SIPLAST FOR SPECIFIC REQUIREMENTS.
2. THE CARPENTRY AND METAL WORK SHOWN DEPICT SHOP FABRICATION AND JOB-SITE ASSEMBLY. THESE COMPONENTS SHOULD BE DESIGNED/FABRICATED/INSTALLED ACCORDING TO GENERALLY ACCEPTED INDUSTRY PRACTICES, STANDARDS, AND APPROVALS.
3. DISSIMILAR METAL TYPES SUBJECT TO ELECTROLYTIC REACTION SHOULD BE PHYSICALLY SEPARATED.
4. REQUIREMENTS AND RECOMMENDATIONS DETAILED IN SIPLAST SPECIFICATIONS SHALL APPLY IN ADDITION TO THE ABOVE DRAWING.

CAUTION: SIPLAST RECOMMENDS THAT ALL PRACTICES PERTAINING TO NRCA CERTA GUIDELINES BE FOLLOWED WHEN TORCHING METHODS ARE EMPLOYED. THIS INCLUDES PERFORMING A FIRE WATCH FOLLOWING ANY TORCH APPLICATIONS. ALWAYS HAVE APPROVED FIRE-EXTINGUISHING EQUIPMENT NEARBY.

TYP. CONDUIT/SMALL PIPE PENETRATION
SCALE: NTS

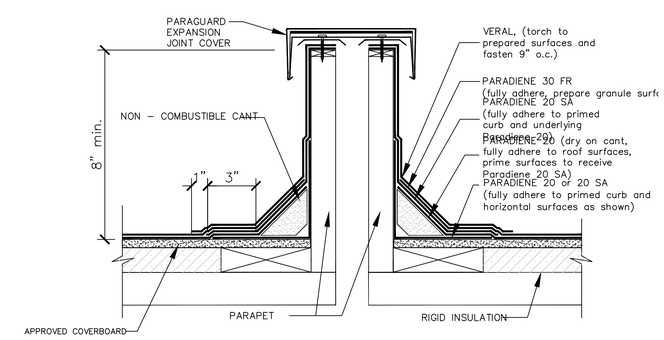

NOTES: 1. REFER TO THE PARAGUARD ROOF PERIMETER SYSTEM INSTALLER'S GUIDE FOR INFORMATION ON PRODUCTS, SIZING, AND INSTALLATION OF THE PARAGUARD SYSTEM.
2. WHERE PRIMER IS INDICATED TO MAINTAIN PROPER ADHESION, TA-119 PRIMER IS REQUIRED FOR ALL PARADIENE 20 SA FLASHING REINFORCING AND STRIPPING PLY APPLICATIONS. USE PA-1125 OR PA-917 LS FOR ALL NON-PARADIENE 20 SA APPLICATIONS. CONTACT SIPLAST FOR SPECIFIC REQUIREMENTS.
3. PREPARE GRANULE SURFACES UNDER FLASHING BY TORCH PREPARATION.
4. THE CARPENTRY WORK SHOWN DEPICTS SHOP FABRICATION AND JOB-SITE ASSEMBLY. THESE COMPONENTS SHOULD BE DESIGNED/FABRICATED/INSTALLED ACCORDING GENERALLY ACCEPTED INDUSTRY PRACTICES, STANDARDS, AND APPROVALS.
5. DISSIMILAR METAL TYPES SUBJECT TO ELECTROLYTIC REACTION SHOULD BE PHYSICALLY SEPARATED.
6. REQUIREMENTS AND RECOMMENDATIONS DETAILED IN SIPLAST SPECIFICATIONS SHALL APPLY IN ADDITION TO THE ABOVE DRAWING.

CAUTION: SIPLAST RECOMMENDS THAT ALL PRACTICES PERTAINING TO NRCA CERTA GUIDELINES BE FOLLOWED WHEN TORCHING METHODS ARE EMPLOYED. THIS INCLUDES PERFORMING A FIRE WATCH FOLLOWING ANY TORCH APPLICATIONS. ALWAYS HAVE APPROVED FIRE-EXTINGUISHING EQUIPMENT NEARBY.

TYP. FLASHING BETWEEN BUILDINGS
SCALE: NTS

DAMMON ENGINEERING, INC.
LOUISIANA & MISSISSIPPI
www.dammonengineering.com
info@dammonengineering.com
PH: 985.649.3832
Chief Engineer: Brian Mistich, PE
554 Old South Trail
Slidell, LA 70458

#	DESCRIPTION	DATE

REVISIONS

STATE OF LOUISIANA
BRIAN A. MISTICH
License No. 30187
3/3/2022
PROFESSIONAL ENGINEER

NEW ADDITION
HONTAS MOB
71211 LA HWY 21
COVINGTON, LA 70433

JOB No: 2443 DATE: 03-03-2022
DRAWN BY: CHECKED BY:

THIS DRAWING IS AN INSTRUMENT OF SERVICE AND IS THE PROPERTY OF DAMMON ENGINEERING, INC. AND MUST BE RETURNED ON REQUEST. ALL ALTERATIONS TO THIS DOCUMENT MUST BE APPROVED IN WRITING BY THE ARCHITECT/ENGINEER. ALL DRAWINGS, SPECIFICATIONS, PLANS, PROCEDURES, DESIGNS AND ARRANGEMENTS ARE THE PROPERTY OF DAMMON ENGINEERING, INC. AND MAY NOT BE USED, REPRODUCED OR TRANSMITTED WITHOUT WRITTEN CONSENT OF DAMMON ENGINEERING, INC. ALL RIGHTS RESERVED.

SHEET TITLE: ROOF PLAN

DRAWING NUMBER: A103

SHEET No: 13 of 19