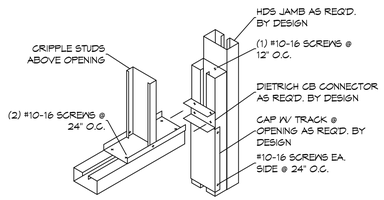

1 MULTIPLE JAMB STUDS
SCALE: N.T.S.

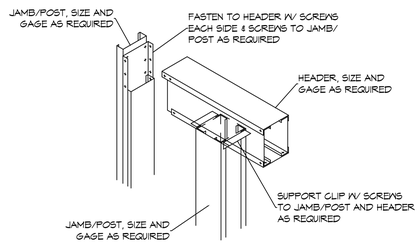

2 HEADER DETAIL
SCALE: N.T.S.

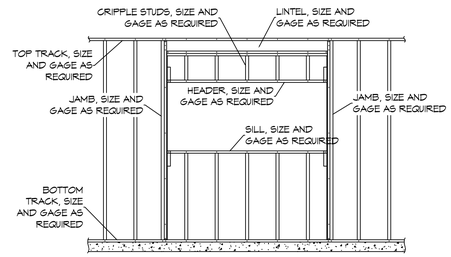

3 LOAD-BEARING WINDOW OPENING
SCALE: N.T.S.

LINTEL, BOXED HEADER SCHEDULE	
WIDTH OF OPENING	BOXED HEADER DESIGNATION
4 FEET OR LESS	4005200-97 [50] (2) BOXED
4 FEET TO 6 FEET	6005250-97 [50] (2) BOXED
6 FEET TO 8 FEET	8005250-97 [50] (2) BOXED

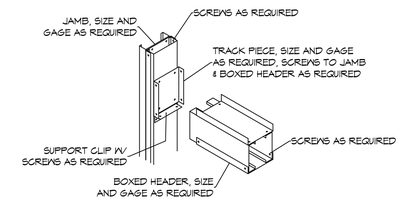

4 BOXED HEADER DETAIL
SCALE: N.T.S.

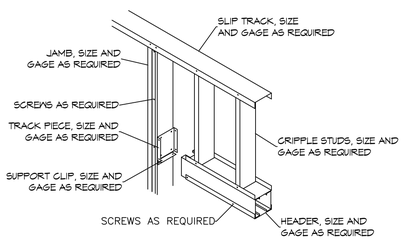

5 LOAD BEARING HEADER JAMB DETAIL
SCALE: N.T.S.

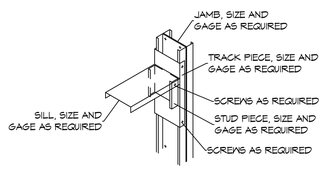

6 SILL DETAIL
SCALE: N.T.S.

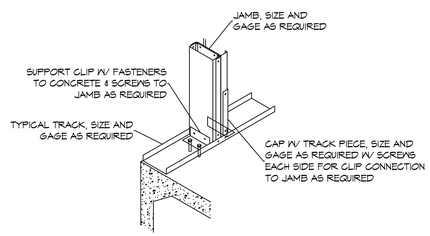

7 BASE CONNECTION
SCALE: N.T.S.

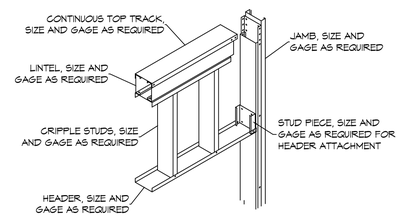

8 LOAD BEARING JAMB AND HEADER DETAIL
SCALE: N.T.S.

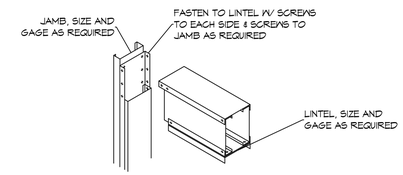

9 LINTEL DETAIL
SCALE: N.T.S.

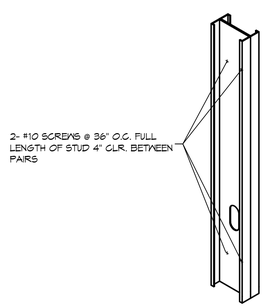

10 BUILT-UP STUD DETAIL
SCALE: N.T.S.

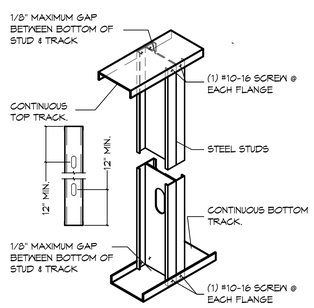

11 TRACK CONNECTION DETAIL
SCALE: N.T.S.

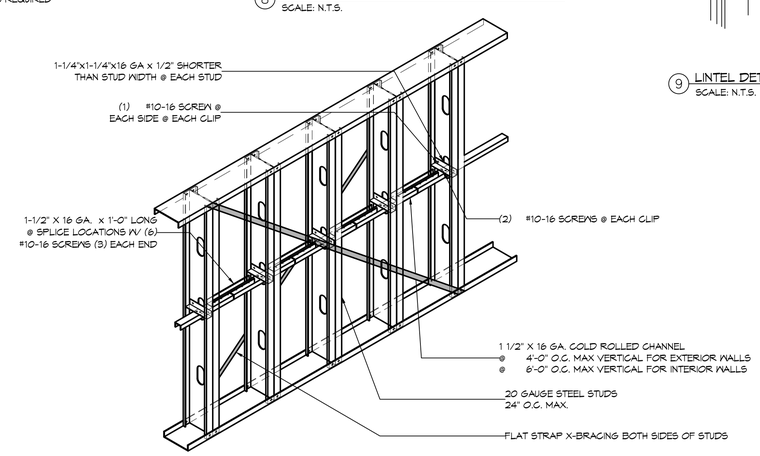

12 HORZ. BRACING DETAIL
SCALE: N.T.S.

DAMMON ENGINEERING, INC.
LOUISIANA & MISSISSIPPI
www.dammonengineering.com
info@dammonengineering.com
PH: 985.649.5832
Chief Engineer: Brian Mistich, PE
534 Oliver Road
Slidell, LA 70458

#	DESCRIPTION	REVISIONS	DATE

STATE OF LOUISIANA
BRIAN A. MISTICH
License No. 30187
3/3/2022
PROFESSIONAL ENGINEER

THIS DRAWING IS PROPERTY OF DAMMON ENGINEERING, INC. THE REPRODUCTION, IN WHOLE OR IN PART, OR USE OF THIS DESIGN OR DRAWING WITHOUT WRITTEN CONSENT OF DAMMON ENGINEERING, INC. IS PROHIBITED. ONLY THE ORIGINAL OF THIS DOCUMENT IS A VALID DOCUMENT. ANY DIGITAL DOCUMENT IS NOT A VALID DOCUMENT. THE DIGITAL DOCUMENT IS THE PROPERTY OF DAMMON ENGINEERING, INC. AND MUST BE RETURNED UPON REQUEST. THIS DOCUMENT WAS PREPARED AND SEALED FOR THE PROJECT TO WHICH IT HAS BEEN PREPARED AND SEALED AND MAY NOT BE USED ON OTHER PROJECTS OR WITHOUT THE WRITTEN CONSENT OF DAMMON ENGINEERING, INC.

NEW ADDITION
HONTAS MOB
71211 LA HWY 21
COVINGTON, LA 70433

JOB No:	2443	DATE:	03-03-2022
DRAWN BY:	DPD	CHECKED BY:	CKD

SHEET TITLE:
FRAMING DETAILS

DRAWING NUMBER:
S202

SHEET No: 9 of 19