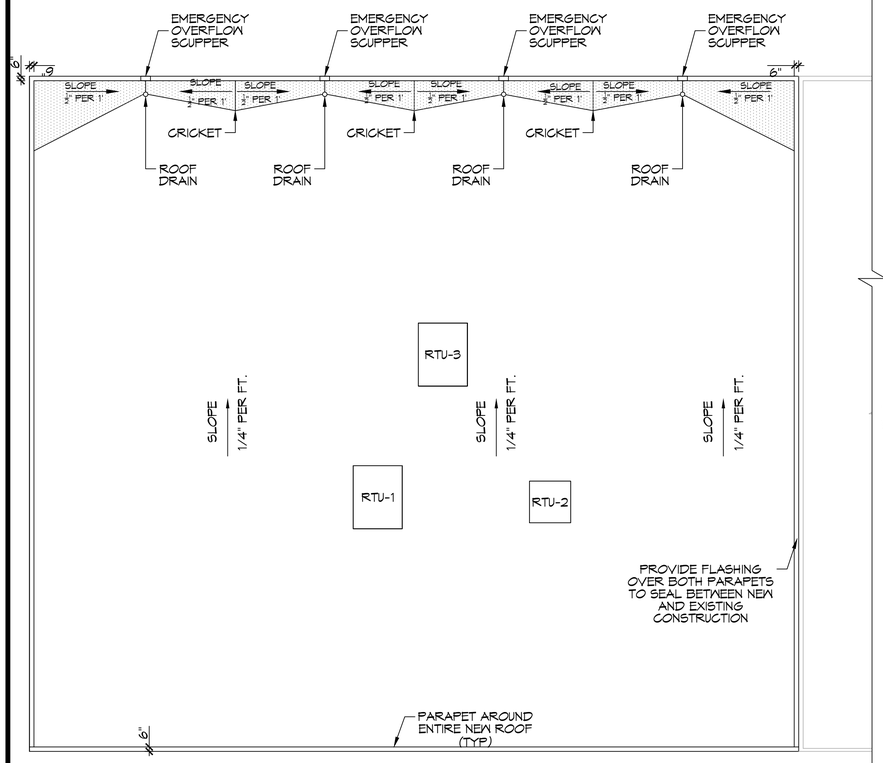

2 ROOF PLAN
SCALE: 1/8 = 1'-0"

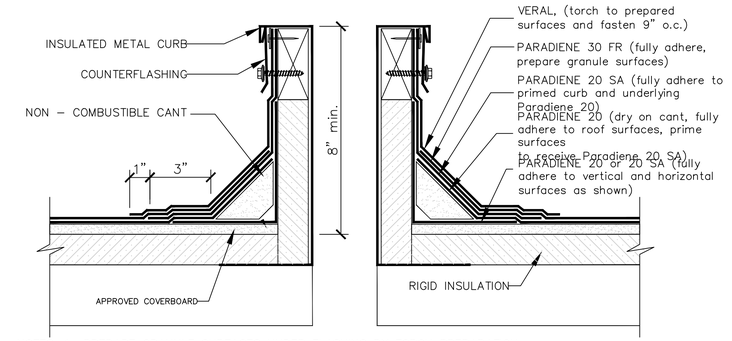

NOTES:
1. PREPARE GRANULE SURFACES UNDER FLASHING BY TORCH PREPARATION.
2. WHERE PRIMER IS INDICATED TO MAINTAIN PROPER ADHESION, TA–119 PRIMER IS REQUIRED FOR ALL PARADIENE 20 SA FLASHING REINFORCING AND STRIPPING PLY APPLICATIONS. USE PA–1125 OR PA–917 L FOR ALL NON–PARADIENE 20 SA APPLICATIONS. CONTACT SIPLAST FOR SPECIFIC REQUIREMENTS.
3. THE CARPENTRY AND METAL WORK SHOWN DEPICTS SHOP FABRICATION AND JOB–SITE ASSEMBLY. THESE COMPONENTS SHOULD BE DESIGNED/FABRICATED/INSTALLED ACCORDING TO GENERALLY ACCEPTED INDUSTRY PRACTICES, STANDARDS, AND APPROVALS.
4. DISSIMILAR METAL TYPES SUBJECT TO ELECTROLYTIC REACTION SHOULD BE PHYSICALLY SEPARATED.
5. REQUIREMENTS AND RECOMMENDATIONS DETAILED IN SIPLAST SPECIFICATIONS SHALL APPLY IN ADDITION TO THE ABOVE DRAWING.

TYP. CURB DETAIL
SCALE: NTS

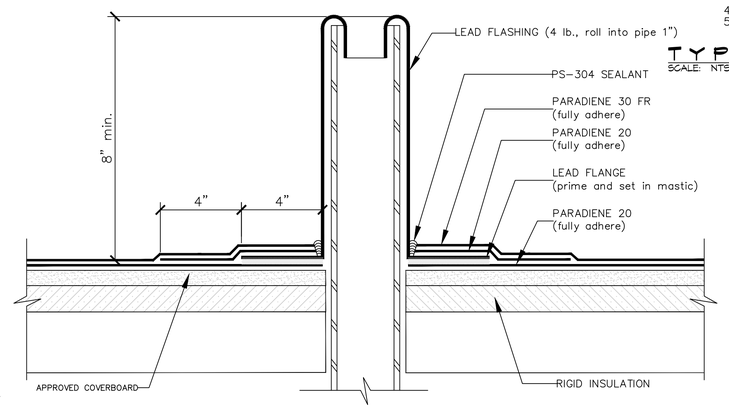

NOTES:
1. WHERE PRIMER IS INDICATED TO MAINTAIN PROPER ADHESION, TA–119 PRIMER IS REQUIRED FOR ALL PARADIENE 20 SA FLASHING REINFORCING AND STRIPPING PLY APPLICATIONS. USE PA–1125 OR PA–917 LS FOR ALL NON–PARADIENE 20 SA APPLICATIONS. CONTACT SIPLAST FOR SPECIFIC REQUIREMENTS.
2. REQUIREMENTS AND RECOMMENDATIONS DETAILED IN SIPLAST SPECIFICATIONS SHALL APPLY IN ADDITION TO THE ABOVE DRAWING.

CAUTION: SIPLAST RECOMMENDS THAT ALL PRACTICES PERTAINING TO NRCA CERTA GUIDELINES BE FOLLOWED WHEN TORCHING METHODS ARE EMPLOYED. THIS INCLUDES PERFORMING A FIRE WATCH FOLLOWING ANY TORCH APPLICATIONS. ALWAYS HAVE APPROVED FIRE–EXTINGUISHING EQUIPMENT NEARBY.

TYP. WASTE STACK DETAIL
SCALE: NTS

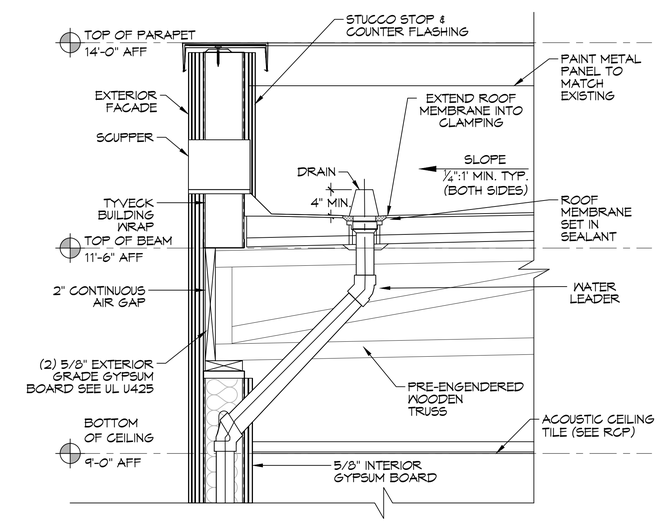

TYP. ROOF DRAIN & SCUPPER
SCALE: NTS

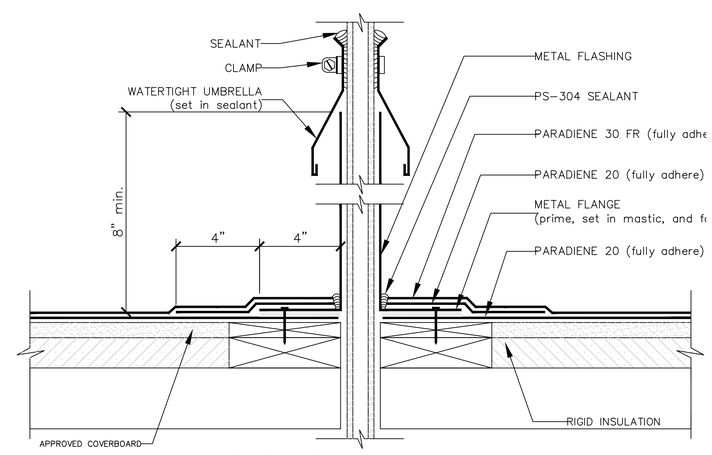

NOTES:
1. WHERE PRIMER IS INDICATED TO MAINTAIN PROPER ADHESION, TA–119 PRIMER IS REQUIRED FOR ALL PARADIENE 20 SA FLASHING REINFORCING AND STRIPPING PLY APPLICATIONS. USE PA–1125 OR PA–917 LS FOR ALL NON–PARADIENE 20 SA APPLICATIONS. CONTACT SIPLAST FOR SPECIFIC REQUIREMENTS.
2. THE CARPENTRY AND METAL WORK SHOWN DEPICT SHOP FABRICATION AND JOB–SITE ASSEMBLY. THESE COMPONENTS SHOULD BE DESIGNED/FABRICATED/INSTALLED ACCORDING TO GENERALLY ACCEPTED INDUSTRY PRACTICES, STANDARDS, AND APPROVALS.
3. DISSIMILAR METAL TYPES SUBJECT TO ELECTROLYTIC REACTION SHOULD BE PHYSICALLY SEPARATED.
4. REQUIREMENTS AND RECOMMENDATIONS DETAILED IN SIPLAST SPECIFICATIONS SHALL APPLY IN ADDITION TO THE ABOVE DRAWING.

CAUTION: SIPLAST RECOMMENDS THAT ALL PRACTICES PERTAINING TO NRCA CERTA GUIDELINES BE FOLLOWED WHEN TORCHING METHODS ARE EMPLOYED. THIS INCLUDES PERFORMING A FIRE WATCH FOLLOWING ANY TORCH APPLICATIONS. ALWAYS HAVE APPROVED FIRE–EXTINGUISHING EQUIPMENT NEARBY.

TYP. CONDUIT/SMALL PIPE PENETRATION
SCALE: NTS

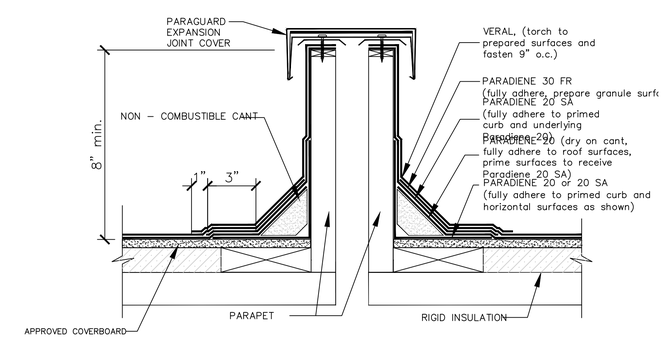

NOTES:
1. REFER TO THE PARAGUARD ROOF PERIMETER SYSTEM INSTALLER'S GUIDE FOR INFORMATION ON PRODUCTS, SIZING, AND INSTALLATION OF THE PARAGUARD SYSTEM.
2. WHERE PRIMER IS INDICATED TO MAINTAIN PROPER ADHESION, TA–119 PRIMER IS REQUIRED FOR ALL PARADIENE 20 SA FLASHING REINFORCING AND STRIPPING PLY APPLICATIONS. USE PA–1125 OR PA–917 LS FOR ALL NON–PARADIENE 20 SA APPLICATIONS. CONTACT SIPLAST FOR SPECIFIC REQUIREMENTS.
3. PREPARE GRANULE SURFACES UNDER FLASHING BY TORCH PREPARATION.
4. THE CARPENTRY WORK SHOWN DEPICTS SHOP FABRICATION AND JOB–SITE ASSEMBLY. THESE COMPONENTS SHOULD BE DESIGNED/FABRICATED/INSTALLED ACCORDING GENERALLY ACCEPTED INDUSTRY PRACTICES, STANDARDS, AND APPROVALS.
5. DISSIMILAR METAL TYPES SUBJECT TO ELECTROLYTIC REACTION SHOULD BE PHYSICALLY SEPARATED.
6. REQUIREMENTS AND RECOMMENDATIONS DETAILED IN SIPLAST SPECIFICATIONS SHALL APPLY IN ADDITION TO THE ABOVE DRAWING.

CAUTION: SIPLAST RECOMMENDS THAT ALL PRACTICES PERTAINING TO NRCA CERTA GUIDELINES BE FOLLOWED WHEN TORCHING METHODS ARE EMPLOYED. THIS INCLUDES PERFORMING A FIRE WATCH FOLLOWING ANY TORCH APPLICATIONS. ALWAYS HAVE APPROVED FIRE–EXTINGUISHING EQUIPMENT NEARBY.

TYP. FLASHING BETWEEN BUILDINGS
SCALE: NTS

DAMMON ENGINEERING, INC.
LOUISIANA & MISSISSIPPI
www.dammonengineering.com
info@dammonengineering.com
PH: 985.649.3832
Chief Engineer: Brian Mistich, PE
554 Old Spanish Trail
Slidell, LA 70458

#	DESCRIPTION	DATE
	REVISIONS	

STATE OF LOUISIANA
BRIAN A. MISTICH
License No. 30187
6/16/2022
PROFESSIONAL ENGINEER

NEW ADDITION
HOTAS MOB

71211 LA HWY 21
COVINGTON, LA 70433

JOB No:	2443	DATE:	6-15-2022
DRAWN BY:	DPP	CHECKED BY:	CKD

The Dammon Engineering, Inc. Drawings, Specifications, and other documents prepared by the Dammon Engineering, Inc. are instruments of service and shall remain the property of Dammon Engineering, Inc. and shall not be used for other projects, or extensions to this project, except by agreement in writing and with appropriate compensation to Dammon Engineering, Inc. All reproductions of these documents must carry the notice of copyright. Any reproduction or distribution of these documents without written consent of Dammon Engineering, Inc. is prohibited. Copyright © 2022 Dammon Engineering, Inc. All rights reserved.

SHEET TITLE:
ROOF PLAN

DRAWING NUMBER:
A103

SHEET No: 13 of 19