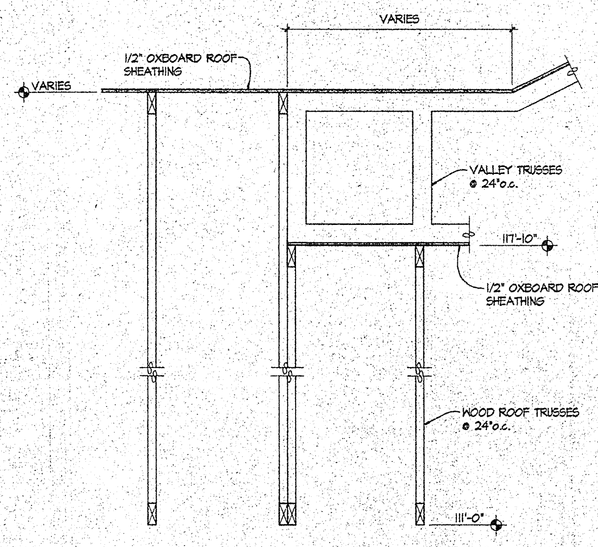

1 SECTION
3/4" = 1'-0"

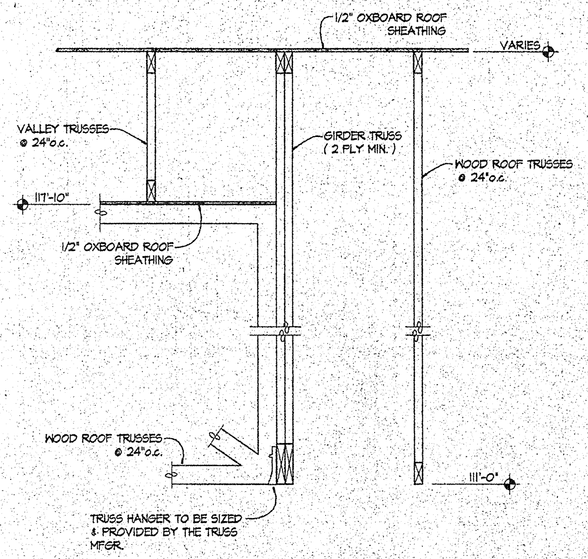

2 SECTION
3/4" = 1'-0"

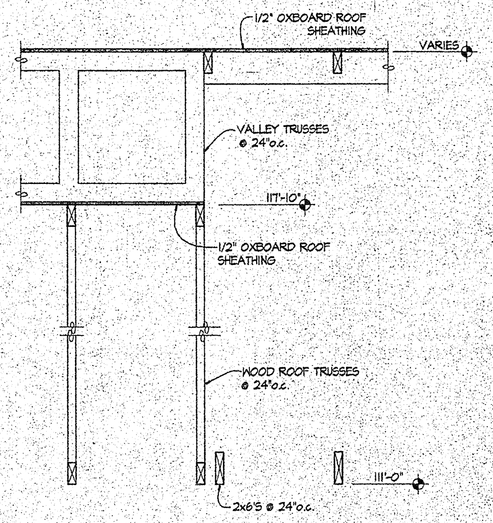

3 SECTION
3/4" = 1'-0"

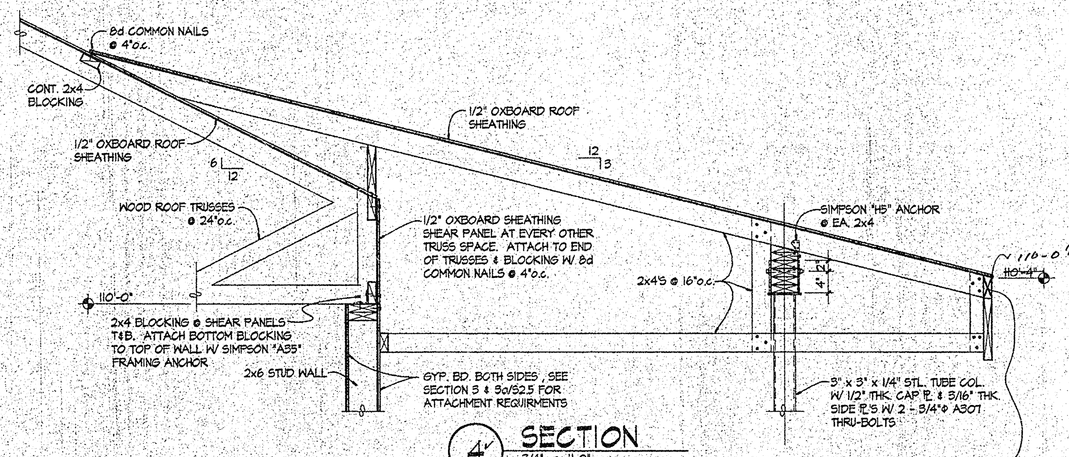

4 SECTION
3/4" = 1'-0"

Eliminate 3½ deep member from face of fascia - revise fascia elevation to read 110-0½ - revise lap of beams accordingly - Add F

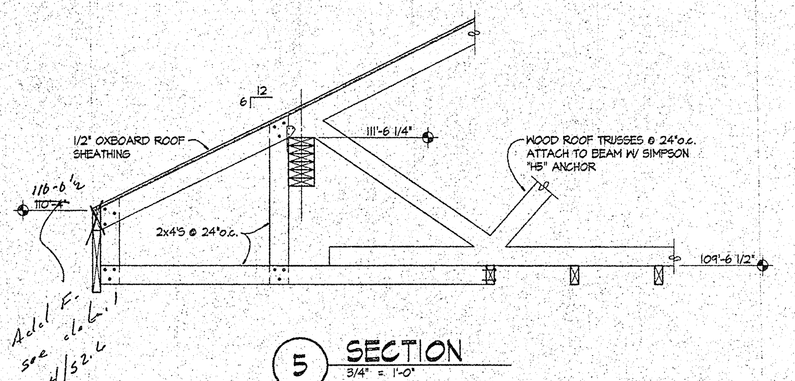

5 SECTION
3/4" = 1'-0"

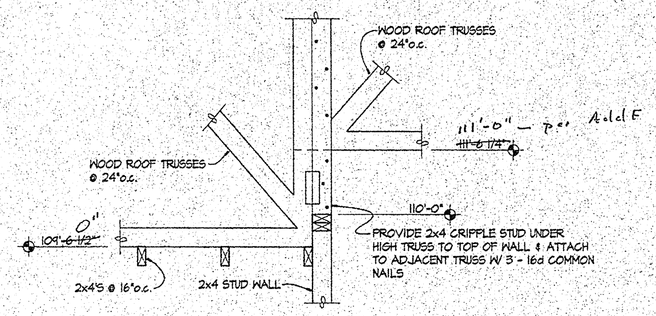

6 SECTION
3/4" = 1'-0"

HEADER SCHEDULE			
MARK	HEADER	BEARING STUDS F.F.	JAMB STUDS F.F.
(A)	3 - 2 x 10'S	2 - 2 x 6'S	1 - 2 x 6
(B)	3 - 2 x 8'S	1 - 2 x 6	1 - 2 x 6
(C)	2 - 2 x 12'S	2 - 2 x 4'S	1 - 2 x 4
(D)	2 - 2 x 10'S	2 - 2 x 4'S	1 - 2 x 4
(E)	2 - 2 x 8'S	1 - 2 x 4	1 - 2 x 4
(F)	2 - 1 3/4" x 9 1/2" MICROLAMS	2 - 2 x 4'S	1 - 2 x 4
(G)	2 - 1 3/4" x 11 7/8" MICROLAMS	3 - 2 x 4'S	1 - 2 x 4

(7) Add clerl as shown on SD-S2 - Add A

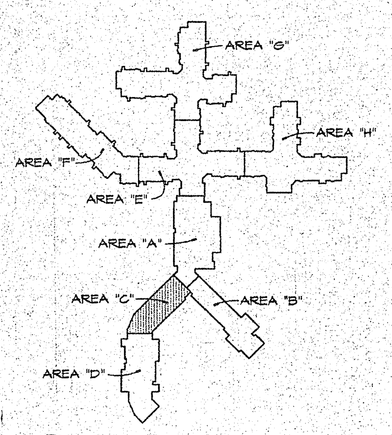

KEY PLAN
NORTH
NO SCALE

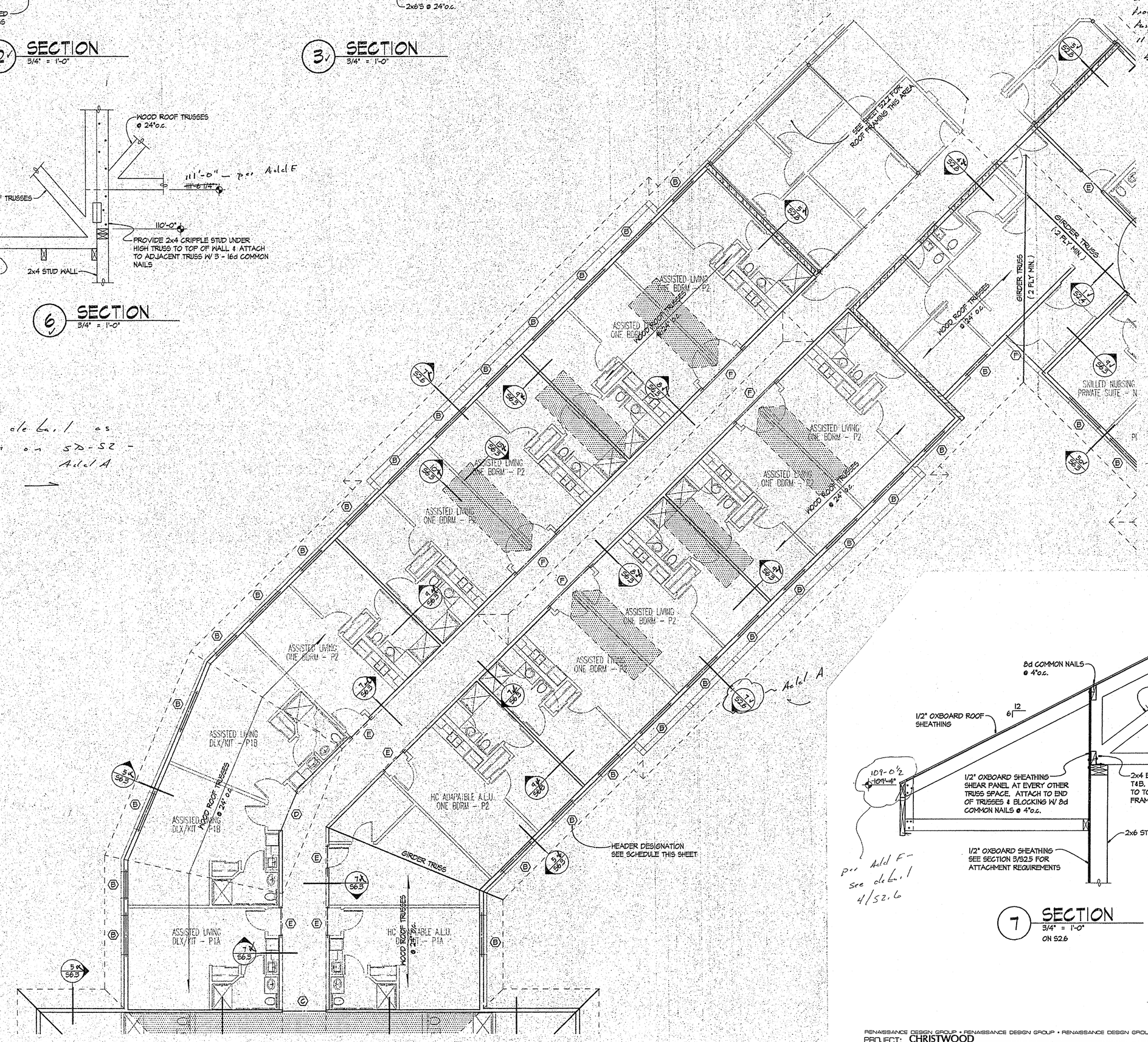

ASSISTED LIVING ROOF FRAMING PLAN - AREA "C"
NORTH
1/8" = 1'-0"

NOTE: SEE STRUCTURAL NOTES ON SHEET S2.0

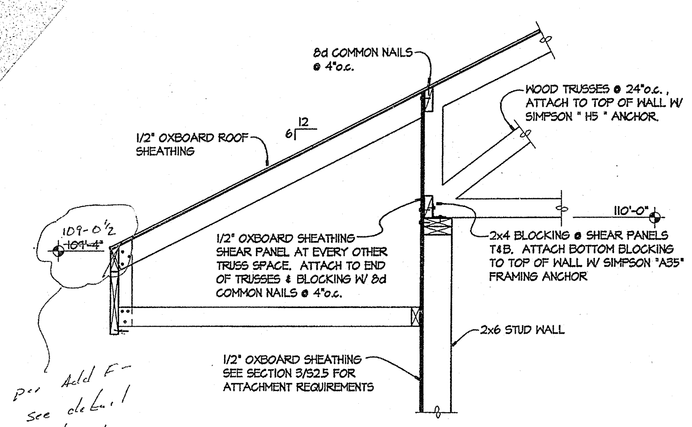

7 SECTION
3/4" = 1'-0"
ON S2.6

RENAISSANCE DESIGN GROUP • RENAISSANCE DESIGN GROUP • RENAISSANCE DESIGN GROUP • RENAISSANCE DESIGN GROUP •

PROJECT: CHRISTWOOD PROJECT #: 9204100
LOCATION: COVINGTON, LOUISIANA BY: TD2 DATE: FILE: 215

RDG Schutte Wilscam Birge
8805 Indian Hills Drive Suite 100 Omaha, Nebraska 68114 402-393-0133 Fax 402-393-0472
ARCHITECTURE INTERIOR DESIGN PLANNING

SD-S2
SHT. #:

These documents have been prepared for the CHRISTWOOD RETIREMENT CENTER project. They are not suitable for use on other projects or in other locations without the express written permission of Schutte Wilscam Birge, Inc. Reproduction is prohibited.
© RDG Schutte Wilscam Birge

THOMPSON, DREESSEN & DORNER, INC.
STRUCTURAL ENGINEERS

RDG Schutte Wilscam Birge
8805 Indian Hills Drive Suite 100 Omaha, Nebraska 68114 402-393-0133 Fax 402-393-0472
ARCHITECTURE INTERIOR DESIGN PLANNING

CHRISTWOOD
A CONTINUING CARE RETIREMENT FACILITY
COVINGTON LOUISIANA

DATE: 25 NOVEMBER 1994
PROJECT #: 9204100
FILE: 215

S2.6